aerospace
climate control
electromechanical
filtration
fluid & gas handling
hydraulics
pneumatics
process control
sealing & shielding

Accumulator Accessories

Clamps, Brackets, Charging Sets, Safety Blocks, Burst Discs

Parker

OLAER

h.hefel Technik

ENGINEERING YOUR SUCCESS.

Clamps - carbon steel with zinc protection

Clamps : Carbon Steel with zinc plated protection, Rubber EPDM (Version 48), Rubber NBR Nitrile (Version 25)

Type Part number	Design	* Min to Max Tightening Ø mm	Accumulator Capacity (Litres)	Dimensions in mm											Mounting Bolts	Fixing Bolts Ø	Weight kg	* Tightening torque N.m	* max allowable weight if vertical equipment kg	*max allowable weight if horizontal equipment kg
				A	B	C	D	E	F	G Min/ Max		I	J	H						
A56 20149203625	E	54 to 56	EHV 0,2L	82	134	97	56	37	-	36	36	9	31	14	M10x80	8	0.45	7	10	30
E95 20250803648	E	87 to 97	DA 0,32L EHV 0.5L EBV0.5L	129	155	114	95	28	-	61.5	66.5	9	40	35	M8x75	8	0.30	7	30	90
E106 20250903648	E	99 to 109	DA 0,5L	140	155	114	106	28	-	68	73	9	40	35	M8x75	8	0.31	7	30	90
E114 20251003648	E	112 to 124	EBV&EHV 1/2.5/5L DA 0,75L210	155	155	114	114	28	-	73	78	9	40	35	M8x75	8	0.34	7	30	90
E136 20251103648	E	128 to 138	DA 0,75L 350 DA 1L	171	155	114	136	28	-	80	85	9	40	35	M8x75	8	0.35	7	30	90
E155 20251203648	E	146 to 157	DA 1,4 ELG 4L20	182	210	163	155	30	-	81	86.5	9	45	35	M10x80	8	0.52	10.5	60	60
E160 20259003648	E	155 to 165	DA 1,4L350 DA 2L	191	210	163	160	32	-	87	91.9	9	45	35	M10x80	8	0.54	10.5	60	60
E168 20251303648	E	166 to 176	EHV 4/6/10L DA2,8L/3,5L	202	210	163	168	30	-	92	96	9	45	35	M10x80	8	0.55	10.5	60	60
E180 20243203625	E	178 to 184	DA 3,5L350	209	210	163	180	35	-	97	100	9	65	35	M10x80	8	0.76	10.5	60	60
D215 20251403648	D	215 to 219	EBV 10/20/32/50L	243	266	216	215	36	300	123	125	15	40	21	M12x70	12 - 14	1.40	9	65	110
D226 20251503648	D	215 to 226	EHV 10 to 57 L	244	270	216	226	35	304	119	123	15	40	21	M12x80	12 - 14	1.40	11	75	150
D368 20127403625	D	363.5 to 370	EBV 100/200	394	420	340	370	35	450	196	201	15	40	21	M12x80	12 - 14	2.17	11	50	80

* Recommended

Design D

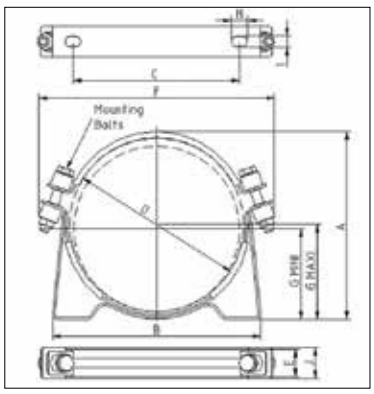

Design E

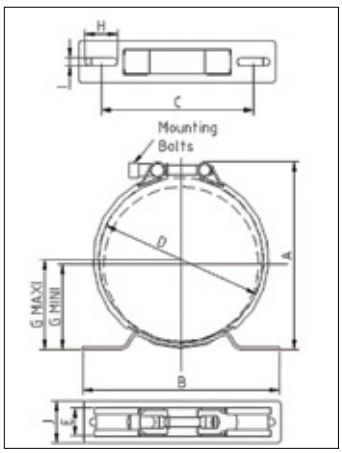

Clamps - stainless steel

Clamps : Stainless steel with nitrile rubber mouldings

Part number	Design	* Min to Max Tightening Ø mm	Dimensions in mm										Mounting Bolts	Fixing Bolts Ø	Weight kg
			A	B	C	D	E	F	G Min/ Max		I	H			
10957	A	91 to 93	108	140	90	91-93	25	140	52	53	11	11	M6x30	10	0.59
A21092N	C	93 to 97	112	126	90	93-97	30	-	59	61	9	13	M12x80	8	0.61
10981	C	112 to 116	140	144	100	112-116	30	-	68	70	9	13	M12x80	8	0.75
A211204N	B	116 to 124	150	140	100	116-124	30		70	74	9	13	M12x80	8	0.84
11078-DEE	B	116 to 125	135	141	100	116-125	30		64	69	9	13	M12x80	8	0.81
11074	A	135 to 140	155	160	120	135-140	25		73	76	11	11	M10x30	10	0.71
11071-DEE	A	144 to 146	182	164	120	144-146	30		81	82	11	11	M10x45	10	1.2
10982-DEE	B	168 to 172	190	186	145	168-172	40	240	96	98	9	13	M12x80	8	1.25
10983	B	218 to 230	250	272	211	218-230	40	306	121	127	15	21	M12x80	12	1.5
11069-1	A	241 to 245	265	278	220	241-245	30		129	131	11	11	M10x40	10	2
11060-DEE	A	266 to 268	270	295	220	266-268	30	345	143	144	11	11	M10x50	10	2

Design A

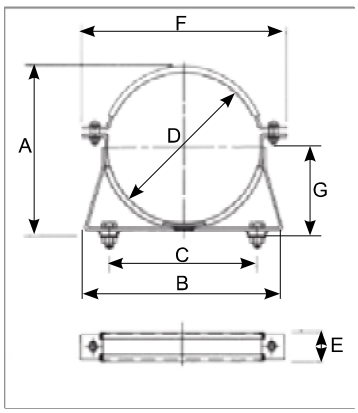

Design B

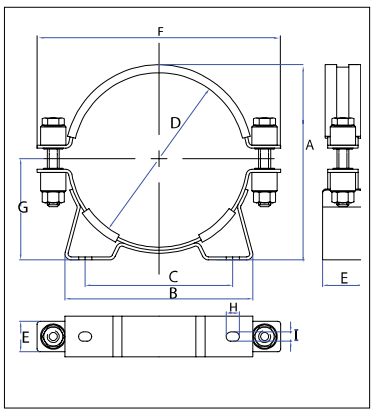

Design C

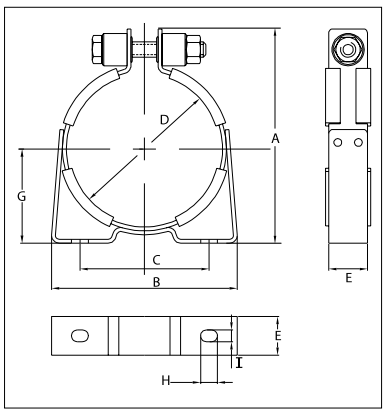

Support Brackets

Carbon steel with zinc plated, cushion ring in NBR (20) or CR (50)

Type Part number	Models	Dimensions in mm													Rubber cushion ring
		Design	A	B	C	H	I	J	K	L	M	N	R	S	Weight kg	
CE89* 20151903620	Accumulators 1 to 5 Litres	A	89	101	125	73	140	75	13	25	60	75	130	-	0.8	20173000050
CE108* 20118703620	EHV 4 & 6 & 10 Litres	A	108	120	150	92	175	95	17	25	80	160	210	-	1.5	20118600050
CE159A* 20109003620	Accumulators 10 to 50 Litres < 550 Bar	B	159	170	200	123	235	115	17	25	100	200	260	40	2.9	20109200020
CE300 20150800100	Accumulators 100-200 Litres	B	300	-	-	200	380	-	20	50	300	375	475	200	30	-

* including cushion ring

Shape A

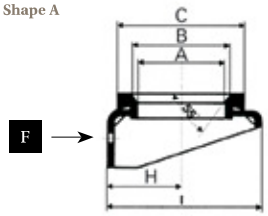

View following F

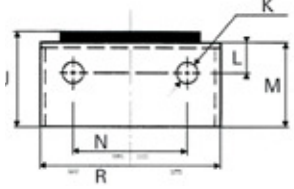

Shape B

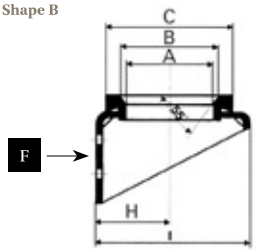

View following F

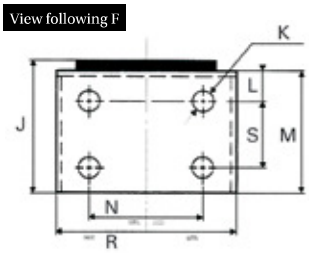

Lifting Eye

According Directive machine 2006/42/CE
Delivered with certificate

Type Part number	Models	A	B	Weight kg
LIFTING EYE DIA.22 10912700200	Accumulators equipped of valve stem DIA .22	146	M31x1	0.65
LIFTING EYE DIA. 50 09098800200	Accumulators equipped of valve stem DIA 50	173	M50x1,5	2.05
LIFTING EYE M79x2 08905900200	Accumulators equipped of valve stem DIA .80	173	M79x2	2.95

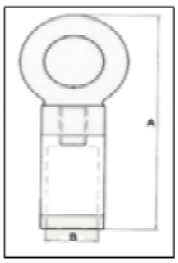

Mounting Frames

Type Part number	For models EHV	Dimensions in mm									Weight kg
		A	B	C	D	E	F	G	H	J	
EF1 20217500125	EHV 4 & 6 & 10 Litres	670	570	225	92	96	340	370	270	50	11
EF2 20217600125	EHV 10 & 12 & 20 & 24.5 Litres	670	570	285	123	115	340	370	270	50	18
EF3 20217700125	EHV 32 & 50 Litres	1405	1300	285	123	115	340	370	270	55	25

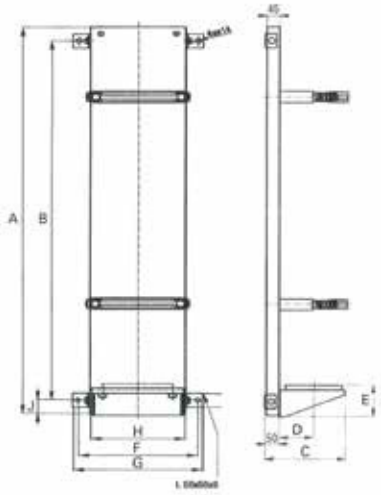

Charging Set VGU

The charging set VGU is an indispensable instrument for the verification, pressurization and nitrogen bleeding of most of the hydraulic accumulators available on the market. The standard set is delivered in a storage case containing the following:

- VGU universal tester and pressurizer (end M28 x 1.50).
- Pressure gauge kit from 0 to 25 bar.
- Pressure gauge kit from 0 to 250 bar.
- Connection adapters for inflation valves (7/8" – 5/8" – 8V1 - M28 x 1.50 G 1/4").
- High pressure hose, 2.5 m long, for connecting to a nitrogen source.
- Hexagon socket screw key 6mm.
- Spare parts kit including rings
- Operating instruction in French, English, German & Italian.

Note: On request, the following options are available:

- Pressure gauge kits with different scale divisions: 63mm with glycerol bath back end G1/4" cyl. equipped with direct gear for Minimess ® connection. Scale divisions 0-10, 0-60, 0-100, 0-400, with accuracy class 1.6%.
- High pressure hose of different length with adapters for nitrogen bottles from various countries (specify country), at each end with a female swivel coupling G1/4" for connecting to the inflation port.

Maximum working pressure: limited by the maximum operating pressure of the installed hydraulic system, pressure limited to **400 bar** in any case.

Type Part number	**Spare Parts**	
	High Pressure Hose	**Spare Part Kits**
	Type Part number	**Type** Part number
VGU/F.25/250.8.TS2.3 20214122823	TS2 (France) 20214800000	10774100023
VGU/F.25/250.8.TS3.3 20214122833	TS3 (Germany) 20228000000	10774100023
VGU/F.25/250.8.TS8.3 20214122883	TS8 (Italy) 20217200000	10774100023
VGU/F.25/250.8.TS9.3 20214122893	TS9 (Netherlands) 20227300000	10774100023
VGU/F.25/400.8.TS2.3 20214139823	TS2 (France) 20214800000	10774100023
VGU/F.25/400.8.TS3.3 20214139833	TS3 (Germany) 20228000000	10774100023
VGU/F.25/400.8.TS8.3 20214139883	TS8 (Italy) 20217200000	10774100023
VGU/F.25/400.8.TS9.3 20214139893	TS9 (Netherlands) 20227300000	10774100023

Spare parts Gauge KIT VGU

Type Part number
0 to 25 bar 00090300000
0 to 250 bar 00090500000
0 to 400 bar 00090600000

SPARE PARTS* Adaptors VGU

Type Part number
Adaptor 5/8" - 18 UNF 20213000223
Long Adaptor 7/8" - 14 UNF 20212700223
Short Adaptor 7/8" - 14 UNF 20213500223
Adaptor 1/4" cyl 20221100220
Coupling 8 V1 20214000200

M28 x 1.5
ADAPTOR
Membrane
Acccumulator
5/8"-18 UNF
20213000223
❷
7/8" -14 UNF (long)
2021270223
❶
7/8" -14 UNF
20213500223
❺
1/4" BSP
20221100220
❽
5/8"-18 UNF
2021300223
❷
8V1
20214000200
❸
STEAM VALVE DESIGN
VALVE TYPE
VALVE D
VALVE A
VALVE B
VALVE C
VALVE E
VALVE F
VALVE G
VALVE H

VGU Connections

Country	Type of Connection
ARGENTINA	B
AUSTRALIA	B
AUSTRIA	C/O
AZERBAIJAN	E/C/O
BELARUS	E/C/O
BELGIUM	A/C/O
BRAZIL	I
BULGARIA	E/A
CANADA	M/P
CHINA	F/J
CZECH REPUBLIC	C/O
DENMARK	C/O
FINLAND	C/O
FRANCE	A

Country	Type of Connection
GERMANY	C/O
GEORGIA	E/C/O
GREECE	A/B
HONG KONG	B
HUNGARY	A/Q
INDIA	B
INDONESIA	B
IRELAND	B
ITALY	N
JAPAN	G
KAZAKHSTAN	E/C/O
LUXEMBOURG	C/O
MALAYSIA	B
MEXICO	M/P/A

Country	Type of Connection
NEW ZEALAND	B
NORTH AFRICA	A
NORWAY	C/O
PHILIPPINES	L/B
POLAND	C
PORTUGAL	B
ROMANIA	A
RUSSIA	E/C/O
SINGAPORE	B
SLOVAKIA	C/O
SLOVENIA	C/O
SOUTH AFRICA	B
SOUTH KOREA	G
SPAIN	A

Country	Type of Connection
SWEDEN	C/O
SWITZERLAND	C/O
THAILAND	B
THE NETHERLANDS	C/O
TURKEY	B/C/O
UKRAINE	C/O
UNITED ARAB EMIRATES	A
UNITED KINGDOM	B
USA	M/P
VIETNAM	B

According to NF-E-29-664 Standard

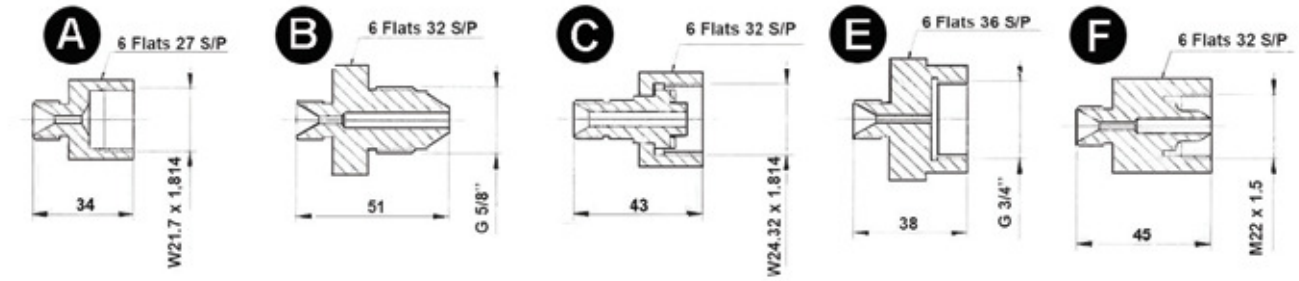

PN : 20005005900 PN : 20208600200 PN : 20064500200 PN : 20208800200 PN : 20209000200

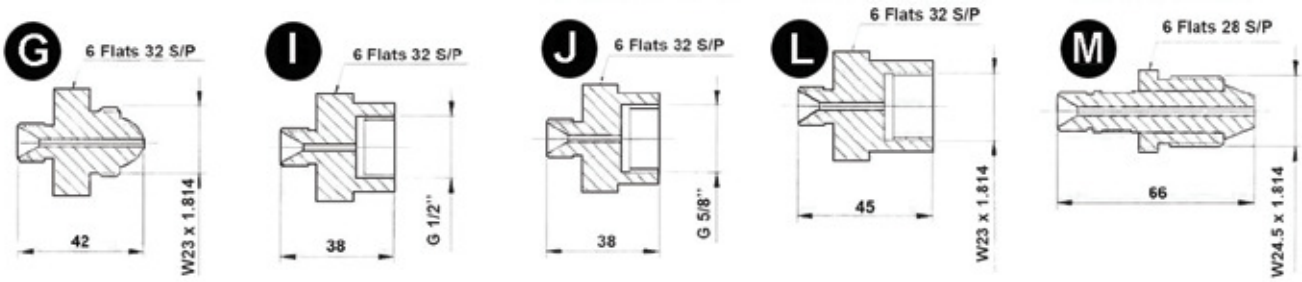

PN : 20209300200 PN : 20209100200 PN : 20208900200 PN : 20209500200 PN : 20188705900

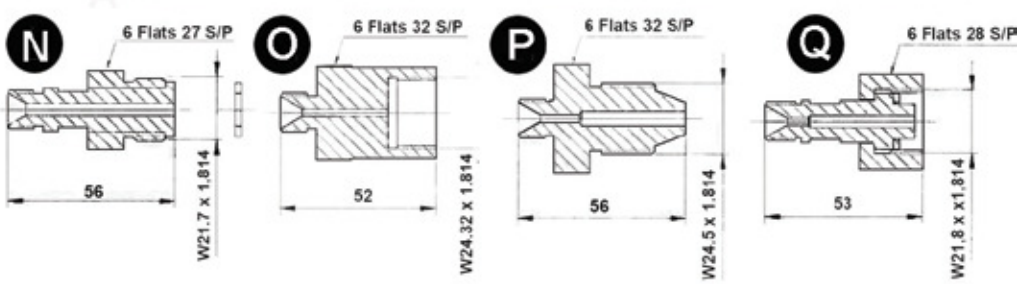

PN : 20216900200 PN : 20208700200 PN : 20211400200 PN : 20247800200

How to order a VGU Charging Set

VGU 25/250 8 TS2 3

Product Type
Type of Charging Set

Pressure Gauges
25/250
25/400

Connection Valve Stem
Code : 8 include following adaptors set

7/8" - 14 UNF (short)	5
7/8" - 14 UNF (long)	1
5/8" - 18 UNF	2
8V1	3
G 1/4" gas cylinder Following ISO 4570	8

High Pressure Hose

TS2 : connection for French bottle	A
TS3 : connection for German bottle	C
TS8 : connection for Italian bottle	N
TS9 : connection for Netherlands bottle	O

For other connections : consult Parker Olaer

Packaging
3: Plastic Box

Charging kit high pressure and "F gas valve"

Charging Sets

A charging set is an indispensable instrument for the verification, pressurization and nitrogen bleeding of most of the hydraulic accumulators available on the market. To use this unit, it is screwed on the gas charging valve of the accumulator and connected via a high pressure hose to the nitrogen source, equipped with a pressure regulator. If only the nitrogen pressure is to be controlled or reduced, this hose is not necessary.

Charging Sets (no case)

Specification

Part Number

10503 Composing:

- Carbon steel body
- Hose including fixed nitrogen adaptor (5/8" BSP Male)
- Bleed valve
- Pressure gauge
- Connection: ¼" BSP male coned to suit hose assembly

Charging Hose: 11774
Maximum Working Pressure: 345 bar
End Termination: 5/8" BSP male bullnose
Length: 2.5 metres

For assembly WITHOUT hose, part numbers become 10500-02, 10500-03 etc.

Part No	Pressure Range (bar)	Charging Set Contents		
		Pressure Gauge(s)		Charging Hose
		Pressure (bar)	Part No	
10500-02	0-25	0-25	45053-099	n/a
10500-03	0-60	0-60	45084-099	n/a
10500-04	0-160	0-160	45085-099	n/a
10500-05	0-250	0-250	45086-099	n/a
10500-07	0-400	0-400	45087-099	n/a
10503-02	0-25	0-25	45053-099	11774
10503-03	0-60	0-60	45084-099	11774
10503-04	0-160	0-160	45085-099	11774
10503-05	0-250	0-250	45086-099	11774
10503-07	0-400	0-400	45087-099	11774
10520-10	0-690	0-1000	45140-099	n/a
10523-10	0-690	0-1000	45140-099	55354-099

Charging Kits (with case)

Specification

Universal Charging Set:

10691-XX Composing:

- Charging set body
- Pressure Gauge (refer to table below)
- 1 x Charging Hose (refer to table below)

Charging Hose: 50096-099
Maximum Working Pressure: 345 bar
End Termination: 1/4" BSP female swivel
Length: 2.5 metres

Charging Hose: 54248-099
Maximum Working Pressure: 690 bar
End Termination: 1/4" BSP female swivel
Length: 2.5 metres

Part No	Pressure Range (bar)	Set/ Kit Contents			
		Pressure Gauge (S)		Charging Hose	Case
		Pressure (bar)	Part No		
10690-02	0-25	0-25	45053-099	50096-099	43183
10690-03	0-60	0-60	45084-099	50096-099	43183
10690-04	0-160	0-160	45085-099	50096-099	43183
10690-05	0-250	0-250	45086-099	50096-099	43183
10690-07	0-400	0-400	45087-099	50096-099	43183
10691-02	0-25	0-25	45053-099	11774	43183
10691-03	0-60	0-60	45084-099	11774	43183
10691-04	0-160	0-160	45085-099	11774	43183
10691-05	0-250	0-250	45086-099	11774	43183
10691-07	0-400	0-400	45087-099	11774	43183
10520-10	0-690	0-1000	45140-099	n/a	n/a
10693-10	0-690	0-1000	45140-099	54248-099	n/a
10694-10	0-690	0-1000	45140-099	n/a	43183
10692-10	0-690	0-1000	45140-099	54248-099	43183

Optional Extras

Country	Part No.	Description
UK	50094-099	Nitrogen Cylinder Adaptor ¼"BSP (M) x 5/8"BSP (M)
	50096-099	Charging Hose ¼"BSP (F) 345 bar x 2.5m long ¼"
	50097-099	both ends
	55354-099	Extension Adaptor for Charging Hose 345 bar Charging Hose ¼"BSP (F) 690B x 2.5m long

	Part No.	Description
Accessories	50032-V10	Charging Hose Adaptor ¼"BSP (M) x ¼"NPT (F)
	43183	Charging Set Carrier Box
	10127	Charging Block Elbow ¼"BSP (M)
	10128	Charging Block Elbow .302" x 32 TPI (M)
	11015	Tool Kit

Charging extender F1

Charging extender F1 is an indispensable instrument for test, pressurization and nitrogen discharge of bladder accumulator when space area limited.

It directly connects to charging VG devices

It includes :

- VG connection
- Nitrogen hose
- Nitrogen valve (for 5/8" UNF) connection

Part Number	VG connection	Designation
20226700000	M28x1.5	CHARGING EXTENDER WITH HOSE 0.65 Meter
20153200000	5/8"UNF	CHARGING EXTENDER WITH HOSE 0.65 Meter
20181500000	5/8"UNF	CHARGING EXTENDER WITH HOSE 2 Meters

Maxi pressure : 210 Bar

Accessories :

For 7/8" UNF bladder accumulator gas valve connection use :

Part Number	Designation
20255603623	Adaptor for 7/8" UNF bladder accumulator gas valve connection

Spare parts :

Part Number	Designation
08284200000	Closing valve PU 210 Bar

Reducing valve for nitrogen bottle

Features

Operating temperature : -20°C à + 60°C

Dimensions : 238 x 110 x 128

Weight : 1, 7 kg

Nominal inlet pressure (P1) : 300 bar

Burst disc

Standard connection :

- Inlet (side nitogen bottle) DIA. 21,7 x 1,814 SI female
- Outlet (side charging set VG) DIA. 21,7 x 1,814 SI mâle

Materials :

Body : brass, valve seat : polyamide, seals EPDM

Maintenance :

A maintenance kit for duly qualified and authorized personnel is available and referenced in the data sheet delivered with the equipment

Part Number	Models	Nominal Pressure (bar)	Nominal Flow (Nm3/h)	Pressure range (bar)	Weight (kg)
0012220000	P25	25	140	1 - 25	1.7
0122300000	P200	200	650	40 - 200	1.7

Portable Nitrogen Station

To facilitate the maintenance of the accumulators, portable nitrogen stations consist of a nitrogen bottle equipped with a regulator and kept in a frame allowing easy transport and can be easily brought to the place of intervention

Technical characteristics

Part Number	Maximum Pressure (bar)	Volume (litres)	Dry weight (kg)	Dimensions (mm)
20174600000	25	5	12	L580-l240-H370
20125800000	200	5	12	L580-l240-H370
20268700000	25	15	24	L1100-l250-H410
20268800000	200	15	24	L1100-l250-H410

Maximum pressure of the bottle : 200 Bar
Regulator with manometer 0 to 400 B upstream
Outlet of bottle: DIA 21,7 x 1,814 SI

Spare parts :

Part Number	Designation
0012220000	Regulator P25
0122300000	Regulator P200

Volume: 15 Litres

Volume: 5 Litres

Nitrogen booster

- ♦ Lightweight
- ♦ Robust
- ♦ Intrinsically safe
- ♦ Versatile
- ♦ User friendly
- ♦ ATEX approved

It requires no electricity, only an air supply is needed to drive the booster. It can even be driven by the nitrogen gas i.e. it is selfsupporting.

It can fill accumulators up to 400 bar and nitrogen bottles can be emptied down to approximately 35 bar.

Technical Details

♦ Gas booster model 65385

♦ Single acting, double drive section.

♦ Note: (1) Maximum safe pressure is based on a minimum 4:1 safety factor on the ultimate strength of the hardware exposed to this pressure.

♦ Approximate practical pressures based on 6,5 Bar drive and 35 Bar efficiency with nitrogen gas.

♦ Outlet 393 Bar (max)

♦ Inlet 28 Bar (min)

♦ Performance curves based on an air drive source of approximately 6,5 Bar 1/2" ID piping

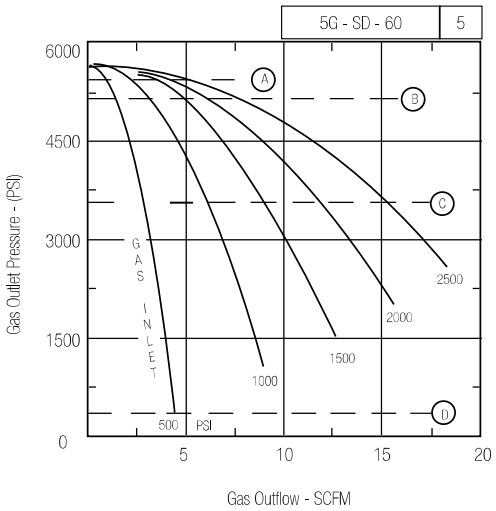

Dashed lines represent approximate air drive consumption.
A = 15 SCFM C = 50 SCFM
B = 20 SCFM D = 75 SCFM

Type	Safe Pressure		Displacement per cycle	Approximate outlet stall pressure	Envelope Dim.	Weight
Part Number	Outlet Bar Maxi	Inlet Bar Maxi	in cm3	(Bar)	(mm)	(Kg)
65385	612	612	51	60 x drive Bar	610(L) x 254(H) x 254(W)	14

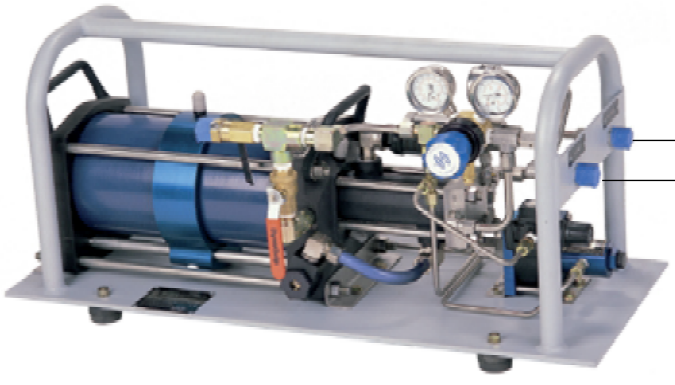

Safety Blocks

Parker Olaer has developed a complete range of decompressing and isolating blocks (sizes 10 to 50) to answer all standard and special applications.

These blocks are in conformity with the European Directive on the equipment under pressure (97/23), these appliances have been designed to group together in a single compact unit all the components necessary for the correct operation of a hydraulic system equipped with hydropneumatic accumulators.

The basic block consists of :

- Isolating valve to isolate the accumulator from the circuit for all the blocks except from model DI 10 where it also ensures the decompression function.
- A drain valve for decompressing the accumulator for all models (except DI 10)
- A pressure relief valve EC with poppet calibrated generally to the maximum service pressure of the accumulator (under no circumstances must this appliance be used to protect the hydraulic pump)
- Pressure tapping port (M)

In the E version, the basic block, to decompress the accumulator, can be equipped with an electro-valve :

- 2 ways 2 positions (DI 10/DI 20/DI 32) cartridge type.
- 3 ways 2 positions (DI 16/DI 24) with impact of connection according to DIN 24340 Form A, ISO 4401 and CETOP RP 121 H.

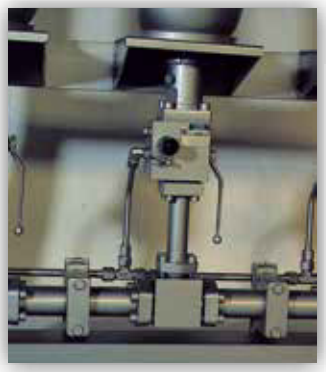

DI Series: How to order a Safety Block

Type	Nominal size in mm	Discharge valve	Flow Control valve	Connection Accumulator side	Adjusting Pressure of relief valve in bar	Approval of relief valve	Seals Material	Electro-valve tension
DI	24	EY	S	6	250	C	V	230 V 50/60

Type DI

10, 16, 20, 24, 32

M: Manual
EY: Electrical, normally open (all models)
EX: Electrical, normally closed (DI10/DI20/DI32)

S: Without
R: With limitor (consult Parker Olaer)

O: Without connection
* Other connections: consult pages 184-192

Standard: 40/80/100/210/250/330/350
Other Value: consult Parker

C: with EC approvement

V : In standard viton
For other options please consult us

00: without electro-valve
24VDC
230V50/60
Other tensions: consult Parker

DI10 - DI16 - DI20 - DI24 - DI32

Models	Application	Drawing	A	B	Sealing					Order code
					JT1 (angle)	JT2 (piston)	JT3	JT4	BS/FS	
DI10 MS/ES DI20 MS/ES	DA 0.075-250/ 0.16-250/ 0.32-210	6	G 1/2"	20	-	-	29 x 3	-	28.7 x 21.5 x 2.5	5
	DA	7	G 1/2"	20	22 x 3	-	29 x 3	-	-	4
	DA	6	G 3/4"	20	-	-	29 x 3	-	32 x 27 x 1.5	6
	EHV 0.5 to 1.6 L	5	G 3/4"	18	-	17 x 3	29 x 3	-	-	2
	EHV 2.5 to 10 L (350 bar)	5	G1 1/4"	19	-	30 x 3	29 x 3	-	-	1
	EHV 10 to 50 L	5	G2"	365	-	48 x 3	29 x 3	-	-	3
DI16 MS/ES	EHV 0.5 to 1.6 L	2	G 3/4"	30	21.3 x 2.5	-	32 x 2	-	-	2
	EHV 0.5 to 1.6 L	4	G 3/4"	30	-	16.9 x 2.7	32 x 2	-	-	F
	EHV 2.5 to 10 L (350 bar)	2	G1 1/4"	30	36.2 x 3	-	32 x 2	-	-	1
	EHV 2.5 to 10 L (350 bar)	4	G1 1/4"	30	-	30 x 3	32 x 2	-	-	D
	EHV 10 to 50 L	3	G2"	96	36.2 x 3	-	32 x 2	54 x 3	-	3
	EHV 10 to 50 L	4	G2"	116	-	48 x 3	32 x 2	-	-	7
	EHVF 10 to 50 L	1	1 1/2"-6000	33	-	-	32 x 2	-	-	J
	EHVF 2.5 to 10 L (350 bar)	1	1 1/4"-3000	33	-	-	32 x 2	-	-	K
	EHVF 2.5 to 10 L (350 bar)	1	1"-6000	33	-	-	32 x 2	-	-	K
DI24 MS/ES	EHV 0.5 to 1.6 L	2	G 3/4"	35	21.3 x 2.4	-	48 x 3	-	-	2
	EHV 2.5 to 10 L (350 bar)	2	G1 1/4"	35	36.2 x 3	-	48 x 3	-	-	1
	EHV 2.5 to 10 L (350 bar)	4	G1 1/4"	35	-	30 x 3	48 x 3	-	-	F
	EHV 10 to 50 L	2	G2"	35	54 x 3	-	48 x 3	-	-	3
	EHV 10 to 50 L	4	G2"	35	-	48 x 3	48 x 3	-	-	D
	EBV 100 to 200 L + Piston Accumulator	3	G2"	80	54 x 3	-	48 x 3	54 x 3	-	7
	EHVF 10 to 50 L	1	2"-3000	45	-	-	48 x 3	-	-	J
	EHVF 10 to 50 L	1	1 1/2"-6000	45	-	-	48 x 3	-	-	J
	EHVF 2.5 to 10 L (350 bar)	1	1 1/4"-3000	45	-	-	48 x 3	-	-	K
	EHVF 2.5 to 10 L (350 bar)	1	1"-6000	45	-	-	48 x 3	-	-	K
DI32 MS/ES	EHV 0.5 to 1.6 L	4	G 3/4"	30	-	17 x 3	37.2 x 3	-	-	2
	EHV 2.5 to 10 L	4	G1 1/4"	30	-	30 x 3	37.2 x 3	-	-	1
	EHV 10 to 50 L	4	G2"	30	-	48 x 3	37.2 x 3	-	-	3

Above dimensions are in mm and are subject to manufacturing tolerances.

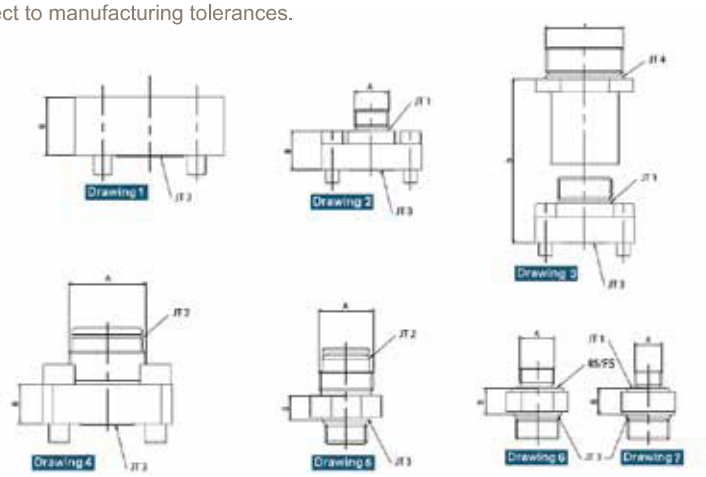

Safety Block DI 10

TECHNICAL DATA DI 10

- **Size:** Nominal diameter : 10 mm
- **Maxi working pressure:** Manual version : 400 bar
  Electrical version : 350 bar
- **Weight without connector:** Manual version : 3,5 kg
  Electrical version : 4 kg
- **Materials:** Carbon steel
  According to PED suitable for fluids group 2
- **Temperature:** Manual version : - 10°C à + 70°C
  Electrical version : - 10°C à + 60°C (ambient temperature)
- **Electrical data:** DC : 24 V AC : 230 V-50/60 Hz Standard protection : IP 65
  Standard protection : IP 65
  Standard connector : DIN 43650
- **Connection accumulator side:** See page 188
- **Pressure / return connector of circuit:** See drawing
- **Pressure relief valve EC marked :** 10 mm(nominal dia)
- **Flow:** Consult the diagram
  Pressure relief valve sealed delivered with declaration of manufacturing conformity

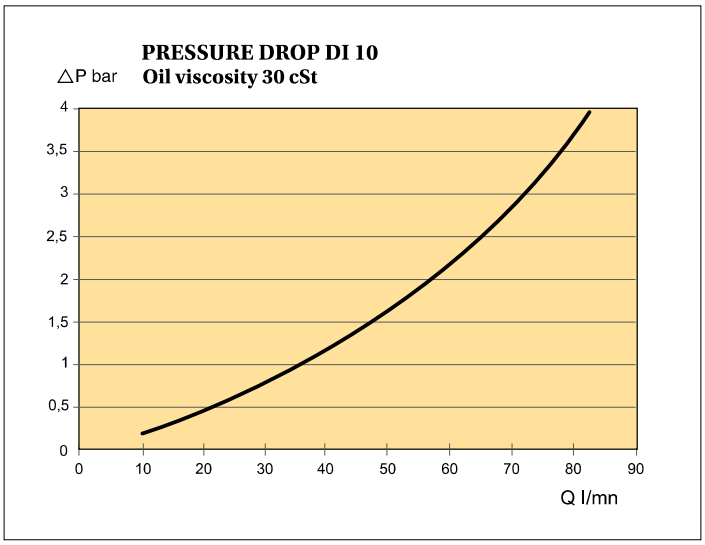

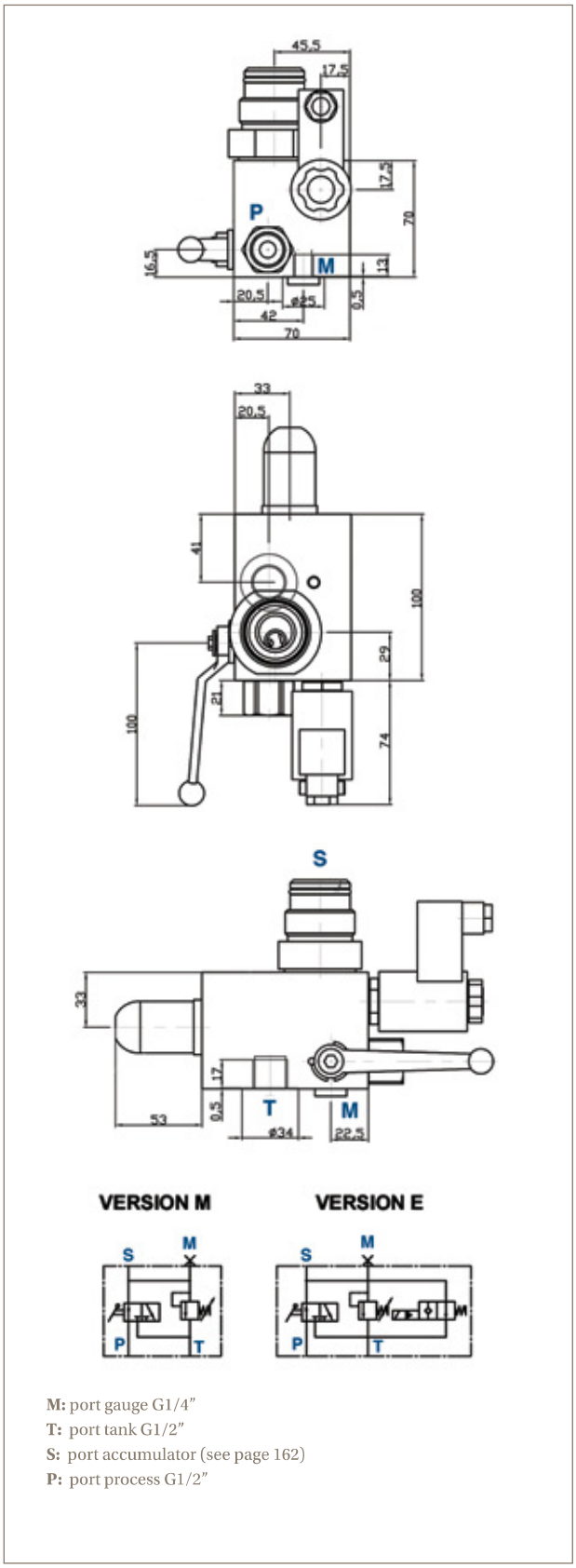

M: port gauge G1/4"
T: port tank G1/2"
S: port accumulator (see page 162)
P: port process G1/2"

Above dimensions are in mm and are subject to manufacturing tolerances.

Safety Block DI 10 Manual Version

Standard version (Carbon steel, rings VITON) temperature -10°C up to 70°C
Maximum working pressure : 350 Bar.
According to PED 2014/68/EU

Connecting to accumulator	Type	Part number
EHV 0,5 up to 1,6 L G3/4" 210 B	DI10MS/2/210CV	35172112G02
EHV 0,5 up to 1,6 L G3/4" 330 B	DI10MS/2/330CV	35172112J02
EHV 0,5 up to 1,6 L G3/4" 350B	DI10MS/2/350CV	35172112Y02
EHV 2,5 up to 10 L G1"1/4 100 B	DI10MS/1/100CV	35172111D02
EHV 2,5 up to 10 L G1"1/4 210 B	DI10MS/1/210CV	35172111G02
EHV 2,5 up to 10 L G1"1/4 250 B	DI10MS/1/250CV	35172111H02
EHV 2,5 up to 10 L G1"1/4 330 B	DI10MS/1/330CV	35172111J02
EHV 2,5 up to 10 L G1"1/4 350 B	DI10MS/1/350CV	35172111Y02
EHV 10 up to 50 L G2" 210 B	DI10MS/3/210CV	35172113G02
EHV 10 up to 50 L G2" 250 B	DI10MS/3/250CV	35172113H02
EHV 10 up to 50 L G2" 330 B	DI10MS/3/330CV	35172113J02

Connecting to accumulator	Type	Part number
DA G1/2" 100 B	DI10MS/4/100CV	35172114D02
DA G1/2" 140 B	DI10MS/4/140CV	35172114Q02
DA G1/2" 210 B	DI10MS/4/210CV	35172114G02
DA G1/2" 250 B	DI10MS/4/250CV	35172114H02
DA G1/2" 330 B	DI10MS/4/330CV	35172114J02
DA G1/2" 350 B	DI10MS/4/350CV	35172114Y02
DA 0,32 210 B	DI10MS/5/210CV	35172115G02
DA 0,075/0,16 - 250 B	DI10MS/5/250CV	35172115H02
DA G3/4" 100 B	DI10MS/6/100CV	35172116D02
DA G3/4" 140 B	DI10MS/6/140CV	35172116Q02
DA G3/4" 210 B	DI10MS/6/210CV	35172116G02
DA G3/4" 250 B	DI10MS/6/250CV	35172116H02
DA G3/4" 330 B	DI10MS/6/330CV	35172116J02
DA G3/4" 350 B	DI10MS/6/350CV	35172116Y02

Other pressure setup on request

Safety Block DI 10 Electrical Version

Standard version (Carbon steel, rings VITON) temperature -10°C up to 60°C
Maximum working pressure : 350 Bar.
According to PED 2014/68/EU

Connecting to accumulator	With Electro-valve tension 24VDC	
	Type	Part number
EHV 0,5 up to 1,6 L G 3/4" 350 B	DI10EYS/2/350CV24VCC	35172132Y22
EHV 2,5 up to 10 L G1"1/4 350 B	DI10EYS/1/350CV24VCC	35172131Y22
DA G1/2" 210 B	DI10EYS/4/210CV24VCC	35172134G22
DA G3/4" 210 B	DI10EYS/6/210CV24VCC	35172136G22
DA G3/4" 250 B	DI10EYS/6/250CV24VCC	35172136H22

With Electro-valve tension 230V50/60	
Type	Part number
DI10EYS/2/350CV230V50/60	35172132Y62
DI10EYS/1/350CV230V50/60	35172131Y62
DI10EYS/4/210CV230V50/60	35172134G62

Spare parts

Type	Characteristics	Part number
RELIEF VALVE EC Size 10	100 BAR	35045931002
RELIEF VALVE EC Size 10	140 BAR	35045931402
RELIEF VALVE EC Size 10	210 BAR	35045932102
RELIEF VALVE EC Size 10	250 BAR	35045932502
RELIEF VALVE EC Size 10	330 BAR	35045933302
RELIEF VALVE EC Size 10	350 BAR	35045933502

Safety Block DI 16

TECHNICAL DATA DI 16

- **Size:** Nominal diameter : 16 mm
- **Maxi working pressure:** Manual version : 350 bar
  Electrical version : 350 bar
- **Weight without connector:** Manual version : 4,3 kg
  Electrical version : 5,8 kg
- **Materials:** Carbon steel
  According to PED suitable with the fluids of group 2
- **Temperature:** Manual version : - 15°C à + 80°C
  Electrical version : - 15°C à + 60°C (ambient temperature)
- **Electrical data:** DC : 24 V AC : 230 V-50/60 Hz; 110 V-50/60 Hz
  Standard protection : IP 65
  Standard connector : DIN 43650
- Power consumption : 30 W
- **Connection accumulator side:** See page 188
- **Pressure / return connector of circuit:** See drawing
- **Pressure relief valve EC marked :** 6 mm (nominal dia)
- **Flow:** Consult the diagram
  Optional flow control valve on the block :Consult us.
  Pressure relief valve sealed delivered with declaration of manufacturing conformity

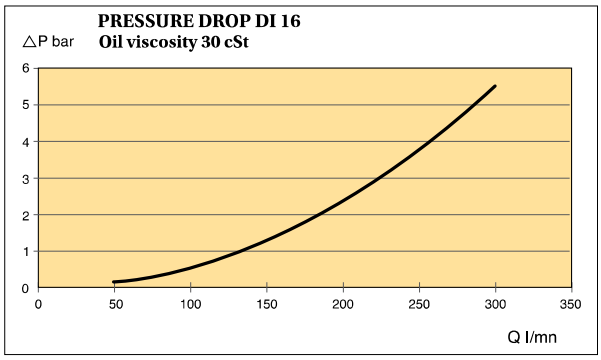

Minimess screw coupling
TYPE 1620

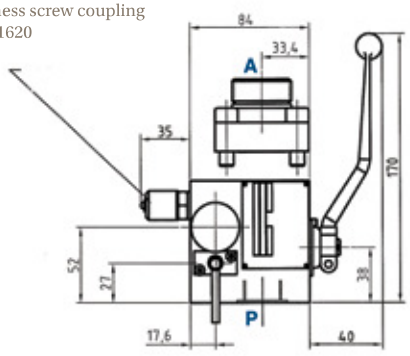

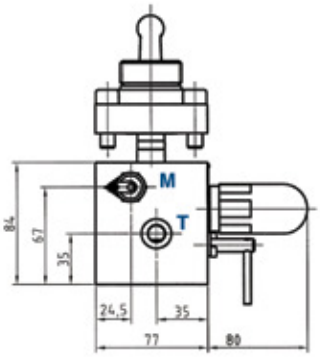

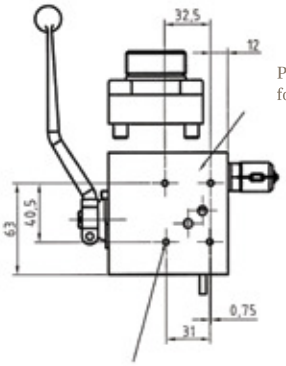

Positioning Cetop size 3
for clack electro-valve

VERSION E

View according to F

4 holes M5 - Depth of tapped 12 useful
Front hole depth : 16 on point

VERSION M

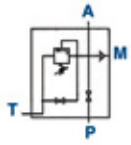

VERSION E

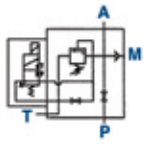

M: screw coupling G 1/4" delivered with Minimess 1620

T: port tank G1/4" flattened dept 1 for bonded seal

A: port accumulator (see page 162)

P: port process G3/4" flattened depth 1.5 for bonded seal

Safety Block DI 16 Manual Version

Standard version (Carbon steel, seals VITON) temperature -15°C up to 80°C Maximum working pressure : 350 Bar.
According to PED 2014/68/EU

Connecting to accumulator	Type	Part number
EHV 0,5 up to 1,6 L G3/4" 210 B	DI16MS/2/210 CV	35128812G02
EHV 0,5 up to 1,6 L G3/4" 250 B	DI16MS/2/250 CV	35128812H02
EHV 0,5 up to 1,6 L G3/4" 330 B	DI16MS/2/330 CV	35128812J02
EHV 0,5 up to 1,6 L G3/4" 350 B	DI16MS/2/350 CV	35128812Y02
EHV 2,5 up to 10 L G1"1/4 210 B	DI16MS/1/210 CV	35128811G02
EHV 2,5 up to 10 L G1"1/4 250 B	DI16MS/1/250 CV	35128811H02
EHV 2,5 up to 10 L G1"1/4 330 B	DI16MS/1/330 CV	35128811J02
EHV 2,5 up to 10 L G1"1/4 350 B	DI16MS/1/350 CV	35128811Y02
EHV 10 up to 50 L G2" 210 B	DI16MS/3/210 CV	35128813G02
EHV 10 up to 50 L G2" 250 B	DI16MS/3/250 CV	35128813H02
EHV 10 up to 50 L G2" 330 B	DI16MS/3/330 CV	35128813J02
EHV 10 up to 50 L G2" 350 B	DI16MS/3/350 CV	35128813Y02

Safety Block DI 16 Electrical Version

Standard version (Carbon steel, seals VITON) temperature -15°C up to 60°C Maximum working pressure : 350 Bar.
According to PED 2014/68/EU. Pre-machine for Electro-valve installation.
For complete electrical safety block please add electro-valve price to DI16EYS
example : DI16EYS/1/330CV24VCC = P/N 35128831J02 + P/N 35157700281

Connecting to accumulator	without Electro-valve Tension	
	Type	Part number
EHV 0,5 up to 1,6 L G3/4" 210 B	DI16EYS/2/210 CV	35128832G02
EHV 0,5 up to 1,6 L G3/4" 250 B	DI16EYS/2/250 CV	35128832H02
EHV 0,5 up to 1,6 L G3/4" 330 B	DI16EYS/2/330 CV	35128832J02
EHV 0,5 up to 1,6 L G3/4" 350 B	DI16EYS/2/350 CV	35128832Y02
EHV 2,5 up to 10 L G1"1/4 210 B	DI16EYS/1/210 CV	35128831G02
EHV 2,5 up to 10 L G1"1/4 250 B	DI16EYS/1/250 CV	35128831H02
EHV 2,5 up to 10 L G1"1/4 330 B	DI16EYS/1/330 CV	35128831J02
EHV 2,5 up to 10 L G1"1/4 350 B	DI16EYS/1/350 CV	35128831Y02
EHV 10 up to 50 L G2" 210 B	DI16EYS/3/210 CV	35128833G02
EHV 10 up to 50 L G2" 250 B	DI16EYS/3/250 CV	35128833H02
EHV 10 up to 50 L G2" 330 B	DI16EYS/3/330 CV	35128833J02
	DI16EYS/3/350 CV	35128833Y02

Electro-Valve Options, Accessories , Spare Parts

Type	Electro valve tension	Part number
ELECTRO-VALVE T3	24 VCC	35157700281
ELECTRO-VALVE T3	110/120VA 50/60 Hz	35157800281
ELECTRO-VALVE T3	220/230VA 50/60 Hz	35157900281
FLOW CONTROL	R16	35141800281
FLANGE M 3/4" GAS CYL connection accumulator side		35054100281
FLANGE M 1"1/4 GAS CYL connection accumulator side		35054200281
FLANGE M 2" GAS CYL connection accumulator side		35103500281
RELIEF VALVE CE Size 6	210	35045732102
RELIEF VALVE CE Size 6	250	35045732502
RELIEF VALVE CE Size 6	330	35045733302
RELIEF VALVE CE Size 6	350	35045733502

Safety Block DI 20

TECHNICAL DATA DI 20

- **Size:** Nominal diameter : 20 mm
- **Maxi working pressure:** Manual version : 400 bar
  Electrical version : 350 bar
- **Weight without connector:** Manual version : 6,4 kg
  Electrical version : 6,9 kg
- **Materials:** Carbon steel
  According to PED suitable with the fluids of group 2
- **Temperature:** Manual version : - 15°C à + 70°C
  Electrical version : - 15°C à + 60°C (ambient temperature)
- **Electrical data:** DC : 24 V AC : 230 V-50/60 Hz
  Standard protection : IP 65
  Standard connector : DIN 43650
- **Connection accumulator side:** See page 188
- **Pressure / return connector of circuit:** See hydraulic drawing
- **Pressure relief valve EC marked :** 10 mm (nominal dia)
- **Flow:** Consult the diagram
  Pressure relief valve sealed delivered with declaration of manufacturing conformity

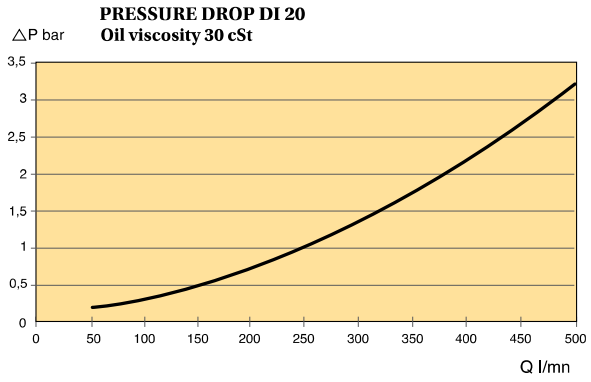

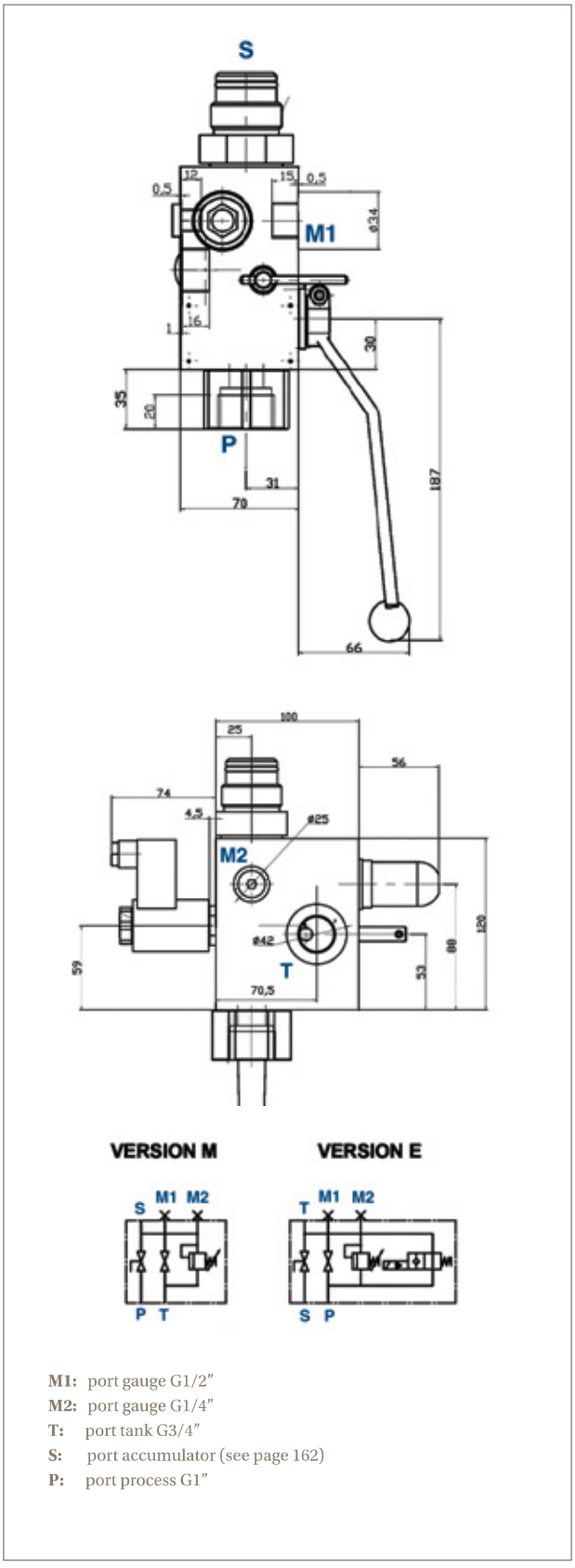

M1: port gauge G1/2"
M2: port gauge G1/4"
T: port tank G3/4"
S: port accumulator (see page 162)
P: port process G1"

Above dimensions are in mm and are subject to manufacturing tolerances.

Safety Block DI 20 Manual Version

Standard version (Carbon steel, seals VITON) temperature -15°C up to 70°C Maximum working pressure: 400 Bar
According to PED 2014/68/EU

Connecting to accumulator	Type	Part number
EHV 0,5 up to 1,6 L G3/4" 330 B	DI20MS/2/330CV	35172212J02
EHV 2,5 up to 10 L G1"1/4 350 B	DI20MS/1/350CV	35172211Y02
EHV 10 up to 50 L G2" 210 B	DI20MS/3/210CV	35172213G02
EHV 10 up to 50 L G2" 250 B	DI20MS/3/250CV	35172213H02
EHV 10 up to 50 L G2" 330 B	DI20MS/3/330CV	35172213J02

Safety Block DI 20 Electrical Version

Standard version (Carbon steel, seals VITON) temperature -15°C up to 60°C Maximum working pressure: 350 Bar
According to PED 2014/68/EU

Connecting to accumulator	With Electro-valve tension 230V50/60		With Electro-valve tension 24VDC	
	Type	Part number	Type	Part number
EHV 2,5 up to 10 L G1"1/4 330 B	DI20EYS/1/330CV230V50/60	35172231J62	DI20EYS/1/330CV24VCC	35172231J22
EHV 2,5 up to 10 L G1"1/4 350 B	DI20EYS/1/350CV230V50/60	35172231Y62	DI20EYS/1/350CV24VCC	35172231Y22
EHV 10 up to 50 L G2" 210 B	DI20EYS/3/210CV230V50/60	35172233G62	DI20EYS/3/210CV24VCC	35172233G22
EHV 10 up to 50 L G2" 250 B	DI20EYS/3/250CV230V50/60	35172233H62	DI20EYS/3/250CV24VCC	35172233H22
EHV 10 up to 50 L G2" 330 B	DI20EYS/3/330CV230V50/60	35172233J62	DI20EYS/3/330CV24VCC	35172233J22

Spare parts

Type	Characteristics	Part number
RELIEF VALVE CE Size 10	210 BAR	35045932102
RELIEF VALVE CE Size 10	250 BAR	35045932502
RELIEF VALVE CE Size 10	330 BAR	35045933302
RELIEF VALVE CE Size 10	350 BAR	35045933502

Safety Block DI 24

TECHNICAL DATA DI 24

- **Size:** Nominal diameter : 24 mm
- **Maxi working pressure:** Manual version : 350 bar
  Electrical version : 350 bar
- **Weight without connector:** Manual version : 9,5 kg
  Electrical version : 11 kg
- **Materials:** Carbon steel According to PED suitable for fluids group 2
- **Temperature:** Manual version : - 15°C à + 70°C
  Electrical version : - 15°C à + 50°C (ambient temperature)
- **Electrical data:** DC : 24 V AC : 230 V-50/60 Hz ; 110 V-50/60 Hz.
  Standard protection : IP 65
  Standard connector : DIN 43650
- Power consumption : 30 W
- **Connection accumulator side:** See page 188
- **Pressure / return connector of circuit:** See drawing
- **Pressure relief valve marked EC:** 10 mm (nominal dia)
- **Flow:** Consult the diagram

Pressure relief valve sealed delivered with declaration of manufacturing conformity

PRESSURE DROP DI 24
Oil viscosity 30 cSt

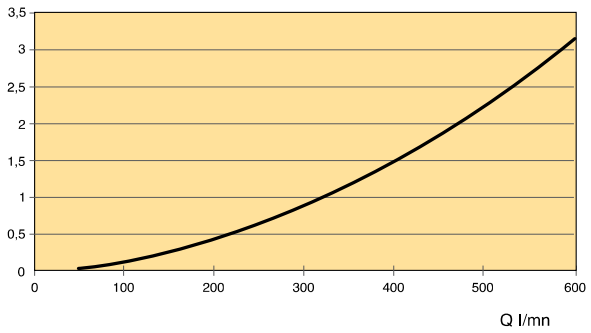

Above dimensions are in mm and are subject to manufacturing tolerances.

VERSION E

Positioning Cetop size 3
for clack electro-valve

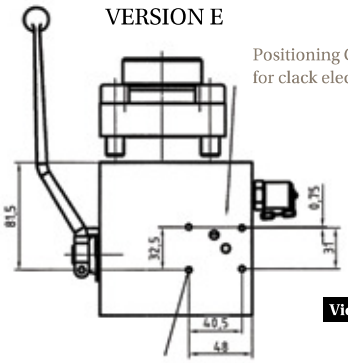

4 holes M5 - Depth of tapped 12 useful
Front hole depth : 16 on point

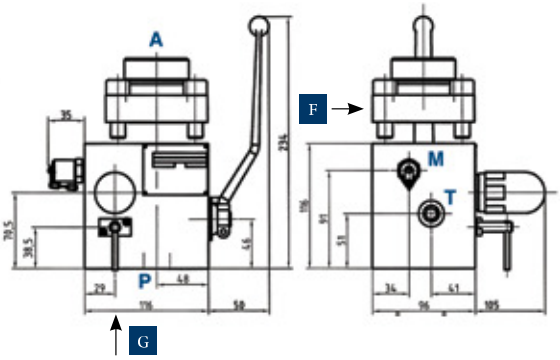

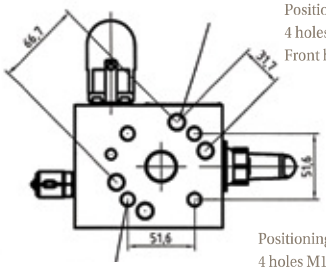

Positioning 1"1/4 SAE 6000
4 holes M14 - Depth of tapped 24 useful
Front hole depth : 31 on point

View according to G

Positioning Cetop 1"1/4 PN 400
4 holes M14 - Depth of tapped 24 useful
Front hole depth : 31 on point

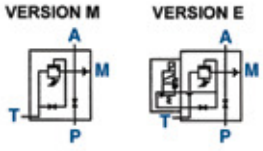

M: screw coupling G 1/4» with Minimess 1620
T: port tank G3/8"
Flattened ø 24,2 prof. depth : 1,5 for bonded seal
A: port accumulator (see page 162)
P: port process (see view according to G)

Safety Block DI 24 Manual Version

Standard version (Carbon steel, seals VITON) temperature -15°C up to 70°C Maximum working pressure : 350 Bar.
According to PED 2014/68/EU

Connecting to accumulator	Type	Part number
EHV 2,5 up to 10 L G1"1/4 210 B	DI24MS/1/210CV	35129011G02
EHV 2,5 up to 10 L G1"1/4 250 B	DI24MS/1/250CV	35129011H02
EHV 2,5 up to 10 L G1"1/4 330 B	DI24MS/1/330CV	35129011J02
EHV 2,5 up to 10 L G1"1/4 350 B	DI24MS/1/350CV	35129011Y02
EHV 10 up to 50 L G2" 210 B	DI24MS/3/210CV	35129013G02
EHV 10 up to 50 L G2" 250 B	DI24MS/3/250CV	35129013H02
EHV 10 up to 50 L G2" 330 B	DI24MS/3/330CV	35129013J02
G2" 350 B	DI24MS/3/350CV	35129013Y02
ACCU PISTON 10 up to 50 L G2" & EBV 100 and 200 L	Consult Parker	

Safety Block DI 24 Electrical Version

Standard version (Carbon steel, seals VITON) temperature -15°C up to 50°C. Maximum working pressure : 350 Bar.
According to PED 2014/68/EU.
Pre-machine for Electro-valve installation.
For complete electrical safety block please add electro-valve price to DI24EYS
example : DI24EYS/1/330CV24VCC = P/N 35129031J02 + P/N 35157700281
Other pressure setup : on request

Connecting to accumulator	without the electro-valve tension	
	Type	Part number
EHV 2,5 up to 10 L G1"1/4 210 B	DI24EYS/1/210CV	35129031G02
EHV 2,5 up to 10 L G1"1/4 250 B	DI24EYS/1/250CV	35129031H02
EHV 2,5 up to 10 L G1"1/4 330 B	DI24EYS/1/330CV	35129031J02
EHV 2,5 up to 10 L G1"1/4 350 B	DI24EYS/1/350CV	35129031Y02
EHV 10 up to 50 L G2" 210 B	DI24EYS/3/210CV	35129033G02
EHV 10 up to 50 L G2" 250 B	DI24EYS/3/250CV	35129033H02
EHV 10 up to 50 L G2" 330 B	DI24EYS/3/330CV	35129033J02
G2" 350 B	DI24EYS/3/350CV	35129033Y02
PISTON ACCUMULATOR 10 up to 50 L G2"& EBV 100 and 200 L	Consult Parker	

Electro-Valve Options, Accessories , Spare Parts

Type	Electro valve tension	Part number
ELECTRO-VALVE T3	24 VCC	35157700281
ELECTRO-VALVE T3	110/120 V 50/60 Hz	35157800281
ELECTRO-VALVE T3	220/230 V 50/60 Hz	35157900281
FLOW CONTROL	R24	35067500281
FLANGE M 1"1/4 GAZ CYL CONNECTION ACCUMULATOR SIDE		10436600281
FLANGE M 2" GAZ CYL CONNECTION ACCUMULATOR SIDE		35037500281
RELIEF VALVE CE Size 10	210 BAR	35045932102
RELIEF VALVE CE Size 10	250 BAR	35045932502
RELIEF VALVE CE Size 10	330 BAR	35045933302
RELIEF VALVE CE Size 10	350 BAR	35045933502

Safety Block DI 32

TECHNICAL DATA DI 32

- **Size:** Nominal diameter : 32 mm
- **Maxi working pressure:** Manual version : 400 bar
  Electrical version : 350 bar
  According to PED with the fluids of group 2
- **Weight without connector:** Manual version : 11,7 kg
  Electrical version : 12,2 kg
- **Materials:** Carbon steel according to PED suitable for fluids group 2
- **Temperature:** Manual version : - 10°C à + 70°C
  Electrical version : - 10°C à + 60°C (ambient temperature)
- **Electrical data:** DC : 24 V AC : 230 V-50/60 Hz
  Standard protection : IP 65
  Standard connector : DIN 43650
- **Connection accumulator side:** See page 188
- **Pressure / return connector of circuit:** See drawing
- **Pressure relief valve marked EC :** 10 mm (nominal dia)
- **Flow:** Consult the diagram

Pressure relief valve sealed delivered with declaration of manufacturing conformity

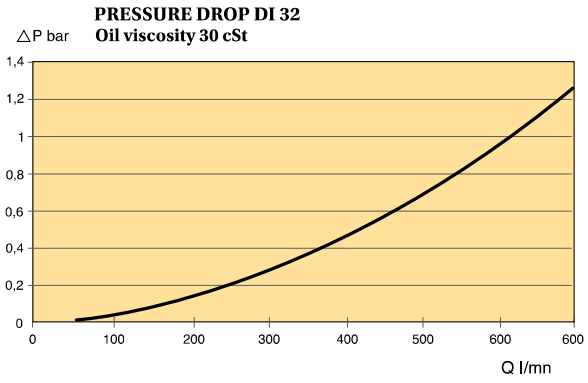

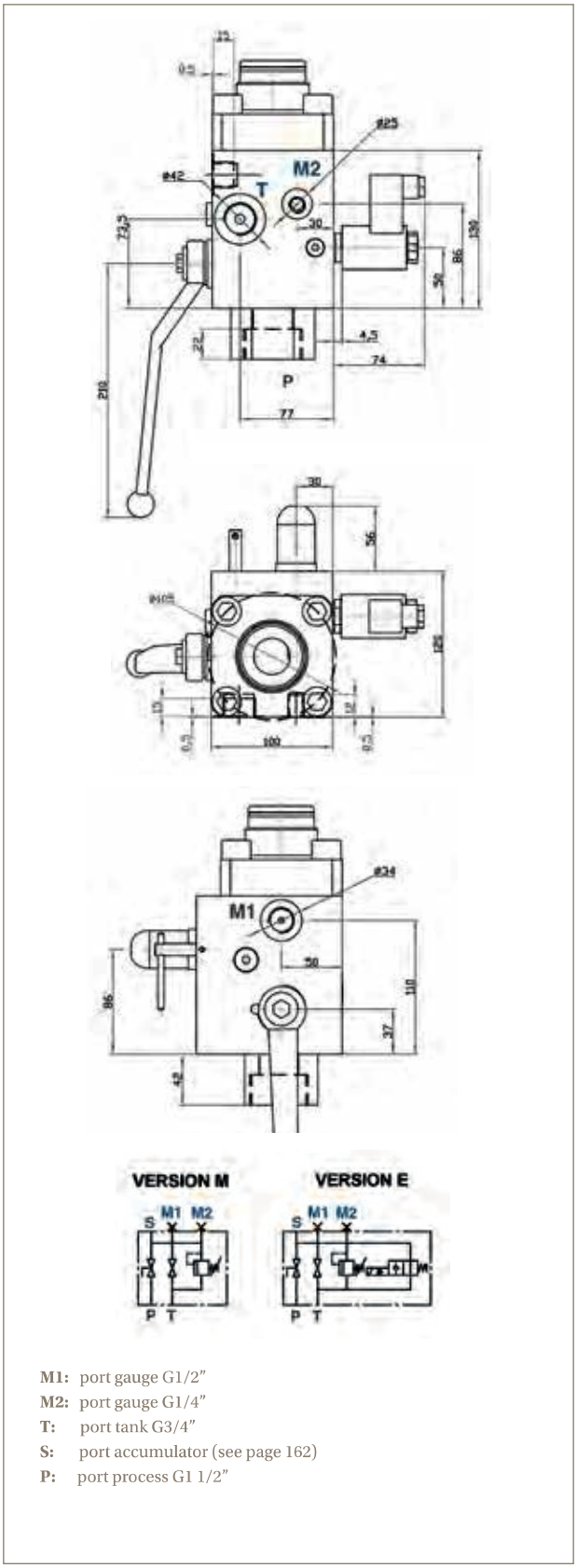

M1: port gauge G1/2"
M2: port gauge G1/4"
T: port tank G3/4"
S: port accumulator (see page 162)
P: port process G1 1/2"

Above dimensions are in mm and are subject to manufacturing tolerances.

Safety Block DI 32 Manual Version

Standard version (Carbon steel, seals VITON) temperature -10°C up to 70°C
Maximum working pressure: 400 Bar
According to PED 2014/68/EU

Connecting to accumulator	Type	Part number
EHV 2,5 up to 10 L G1"1/4 210 B	DI32MS/1/210CV	35172311G02
EHV 2,5 up to 10 L G1"1/4 250 B	DI32MS/1/250CV	35172311H02
EHV 2,5 up to 10 L G1"1/4 330 B	DI32MS/1/330CV	35172311J02
EHV 2,5 up to 10 L G1"1/4 350 B	DI32MS/1/350CV	35172311Y02
EHV 10 up to 50 L G2" 210 B	DI32MS/3/210CV	35172313G02
EHV 10 up to 50 L G2" 250 B	DI32MS/3/250CV	35172313H02
EHV 10 up to 50 L G2" 330 B	DI32MS/3/330CV	35172313J02

Safety Block DI 32 Electrical Version

Standard version (Carbon steel, seals VITON) temperature -10°C up to 60°C
Maximum working pressure: 350 Bar
According to PED 2014/68/EU

Connecting to accumulator	With Electro-valve tension 24VDC		With Electro-valve tensions 230V50/60	
	Type	Part number	Type	Part number
EHV 2,5 up to 10 L G1"1/4 210 B	DI32EYS/1/210CV24VCC	35172331G22	DI32EYS/1/210CV230V50/60	35172331G62
EHV 2,5 up to 10 L G1"1/4 250 B	DI32EYS/1/250CV24VCC	35172331H22	DI32EYS/1/250CV230V50/60	35172331H62
EHV 2,5 up to 10 L G1"1/4 330 B	DI32EYS/1/330CV24VCC	35172331J22	DI32EYS/1/330CV230V50/60	35172331J62
EHV 2,5 up to 10 L G1"1/4 350 B	DI32EYS/1/350CV24VCC	35172331Y22	DI32EYS/1/350CV230V50/60	35172331Y62
EHV 10 up to 50 L G2" 210 B	DI32EYS/3/210CV24VCC	35172333G22	DI32EYS/3/210CV230V50/60	35172333G62
EHV 10 up to 50 L G2" 250 B	DI32EYS/3/250CV24VCC	35172333H22	DI32EYS/3/250CV230V50/60	35172333H62
EHV 10 up to 50 L G2" 330 B	DI32EYS/3/330CV24VCC	35172333J22	DI32EYS/3/330CV230V50/60	35172333J62

Spare parts

Type	Characteristics	Part number
RELIEF VALVE CE Size 10	210 BAR	35045932102
RELIEF VALVE CE Size 10	250 BAR	35045932502
RELIEF VALVE CE Size 10	330 BAR	35045933302
RELIEF VALVE CE Size 10	350 BAR	35045933502

SBA Series Safety Block

TECHNICAL DATA SBA SAFETY BLOCK

- **Construction**

– shut-off valve: ball valve
– pressure relief: poppet-type valve with damping
– manually-operated discharge valve: poppet-type valve
– electrically-operated discharge valve: poppet-type valve (where fitted)

- **Port type -** see table below
- **Mounting position -** Accumulator port A facing upwards
- **Mounting screws (not supplied)**

M8 to grade 10.9, max. torque 26 + 4Nm

- **Ambient temperature :** -30°C to +80°C
- **Max. operating pressure:** 350 bar
- **Relief flow rate G at pnom:** see table below
- **Fluid:** Mineral oil according to DIN/ISO. For other fluid types, please contact the Parker.
- **Operating temperature :** -15°C to +80°C
- **Viscosity:** 10 to 800 mm2/s
- **Δp-Q-graphs:** see right side of this page
- **Electrical discharge:** U=24VDC, 105VDC (for 115V/60 Hz AC supply), P=26W, 100% ED, IP 65 to DIN 40050, connector to DIN 43650 type A
- **Finish:** Black zinc phosphated
- **Seal material:** Nitrile

Flow - Accumulator (A) to Pressure Port (P)

SBA10

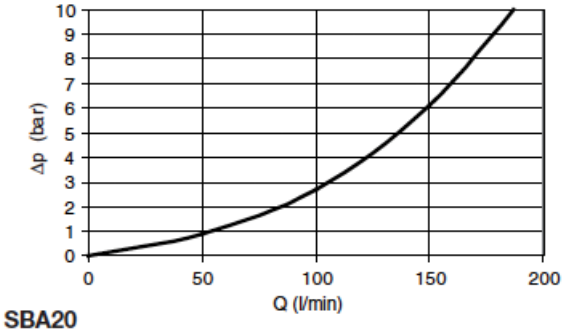

SBA20

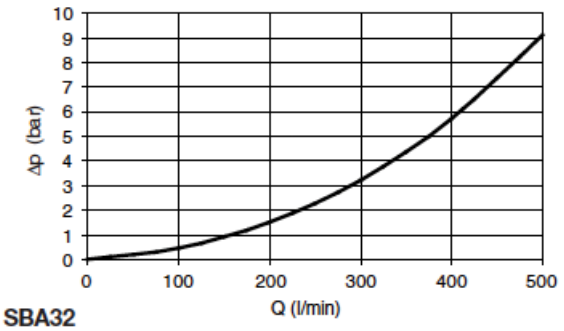

SBA32

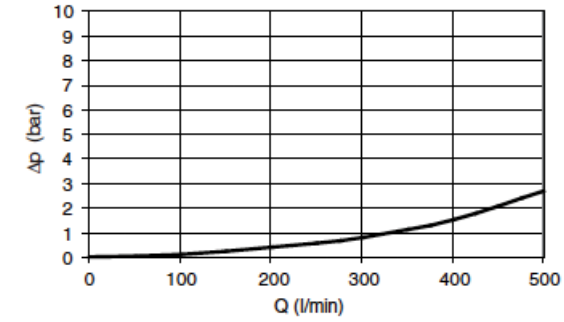

Dimensions and Weights

Type	A1	P	T	M1	M2	Weight (Kg)	Model Number2
10M	M33x2	G1/2	G3/8	G1/2	G1/4	44	SBA10MT1
10E	M33x2	G1/2	G3/8	G1/2	G1/4	47	SBA10ET1
20M	M33x2	G1	G1/2	G1/2	G1/4	60	SBA20MT1
20E	M33x2	G1	G1/2	G1/2	G1/4	65	SBA20ET1
32M	Flange	G1 1/2	G1	G1/2	G1/4	12	SBA32MT1
32E	Flange	G1 1/2	G1	G1/2	G1/4	126	SBA32ET1

[1] A range of adapters is available for accumulator port A – Consult Division
[2] xxx = pressure setting of pressure relief valve – Consult Division

SBA Type M
Manually-Operated Discharge Valve

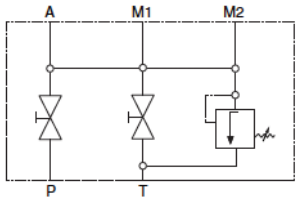

SBA Type E
Manually- and Electrically-Operated Discharge Valves

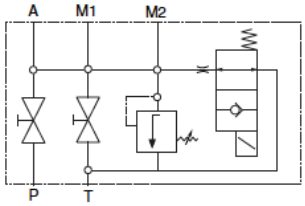

SBA accessories

Pressure Relief Valve

The function of the pressure relief valve is to protect the accumulator in service. If pressure exceeds the relief valve setting, the valve lifts off its seat and fluid is discharged to tank, allowing pressure in the system to fall to a safe level.

Because of its cartridge design, the pressure relief valve can be readily replaced by a valve with a different pressure setting, selected from the table. A new approval under PED 2014/68/EU is not required following this change. The pre-set relief pressure, in bar, is stamped onto the identification plate.

Type Approval

The pressure relief valve is checked and security sealed following approval, according to pressure vessel regulations. It carries a CE mark, type approval number and serial number. All valves are supplied with a certificate showing the pressure setting.

The documents supplied with the pressure relief valve must be retained, as they will be required in the event of repeat tests.

Flow Limits for Safety Valve SV - All Models

Pressure P (bar)	Type	Item Number	
		Nitrile	Fluorelastomer
050	SV050	DBDS10K13/050/C	DBDS10K13/050V/C
070	SV070	DBDS10K13/070/C	DBDS10K13/070V/C
100	SV100	DBDS10K13/100/C	DBDS10K13/100V/C
120	SV120	DBDS10K13/120/C	DBDS10K13/120V/C
140	SV140	DBDS10K13/140/C	DBDS10K13/140V/C
160	SV160	DBDS10K13/160/C	DBDS10K13/160V/C
200	SV200	DBDS10K13/200/C	DBDS10K13/200V/C
210	SV210	DBDS10K13/210/C	DBDS10K13/210V/C
250	SV250	DBDS10K13/250/C	DBDS10K13/250V/C
280	SV280	DBDS10K13/280/C	DBDS10K13/280V/C
300	SV300	DBDS10K13/300/C	DBDS10K13/300V/C
330	SV330	DBDS10K13/330/C	DBDS10K13/330V/C

Flow Limits fo Safety Valve SV - All models

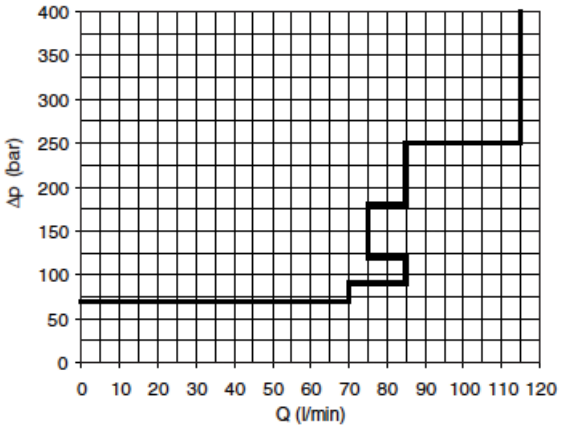

SBA Series: How to order a SBA Safety Block

SBA 10 M T 1 050

Type

SBA

Size

Code:	Size:
10	NG10
20	NG20
32	NG32

Discharge Valve

Code:	Discharge:
M	Manual
E	Manual + Electrical

Pressure Port

Code:	Pressure Port:
T	Thread

Seal Compound

Code:	Seals:
1	Nitrile
5	Fluoreslatomer

Pressure Setting

Code:	Pressure setting:
050	
070	
100	
120	
others available	
See table above	

TECHNICAL DATA SAFETY BLOCK

SBA10MT1

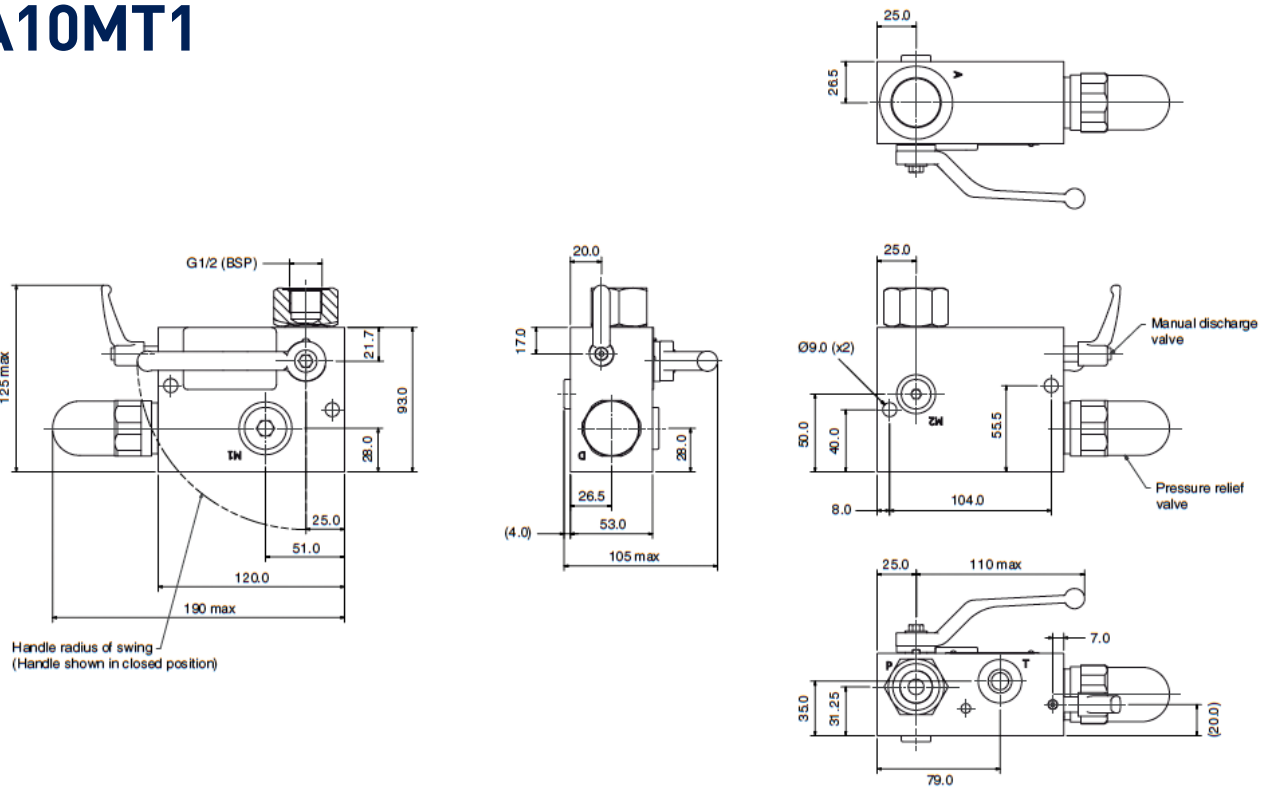

SBA10ET1

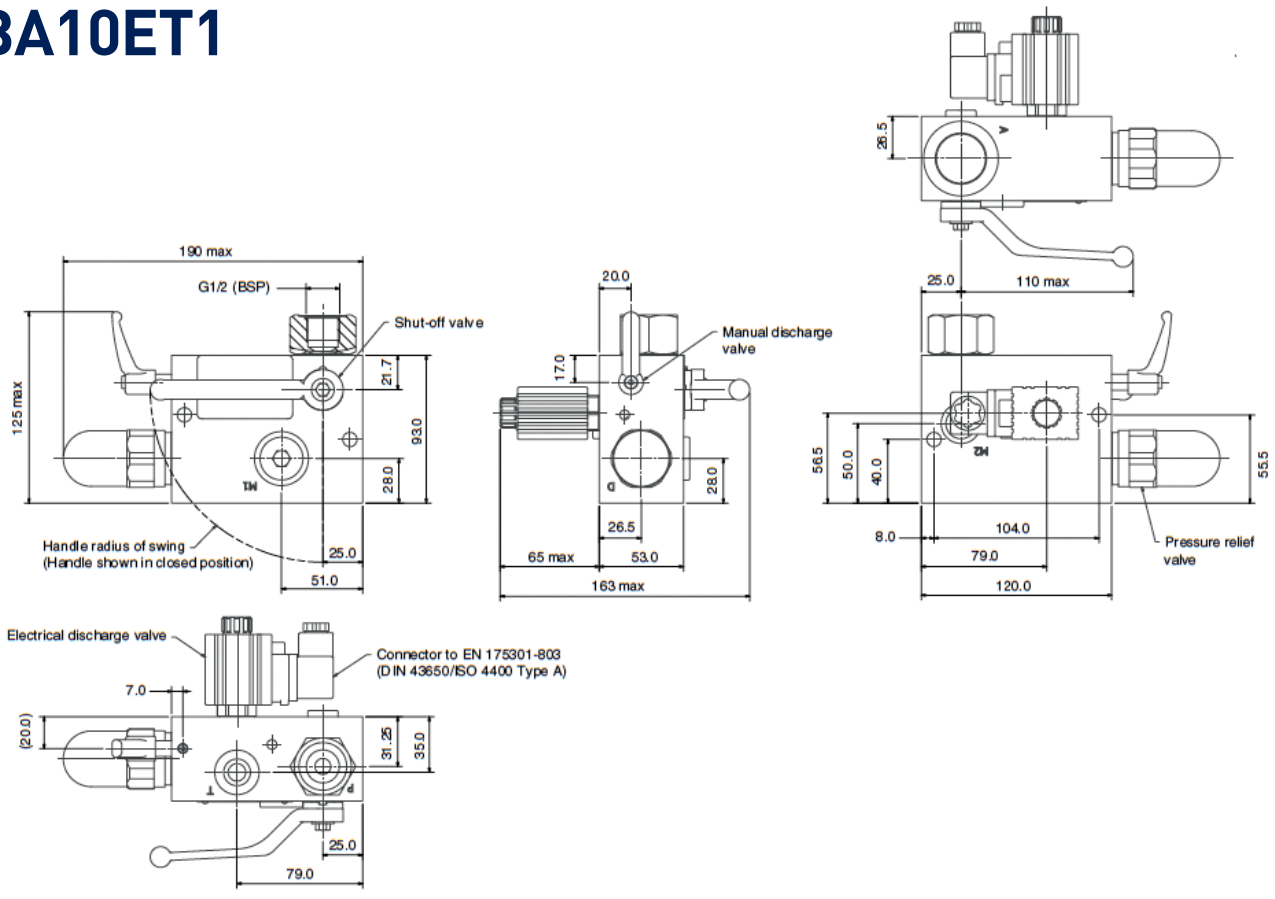

Above dimensions are in mm and are subject to manufacturing tolerances.

SBA20MT1

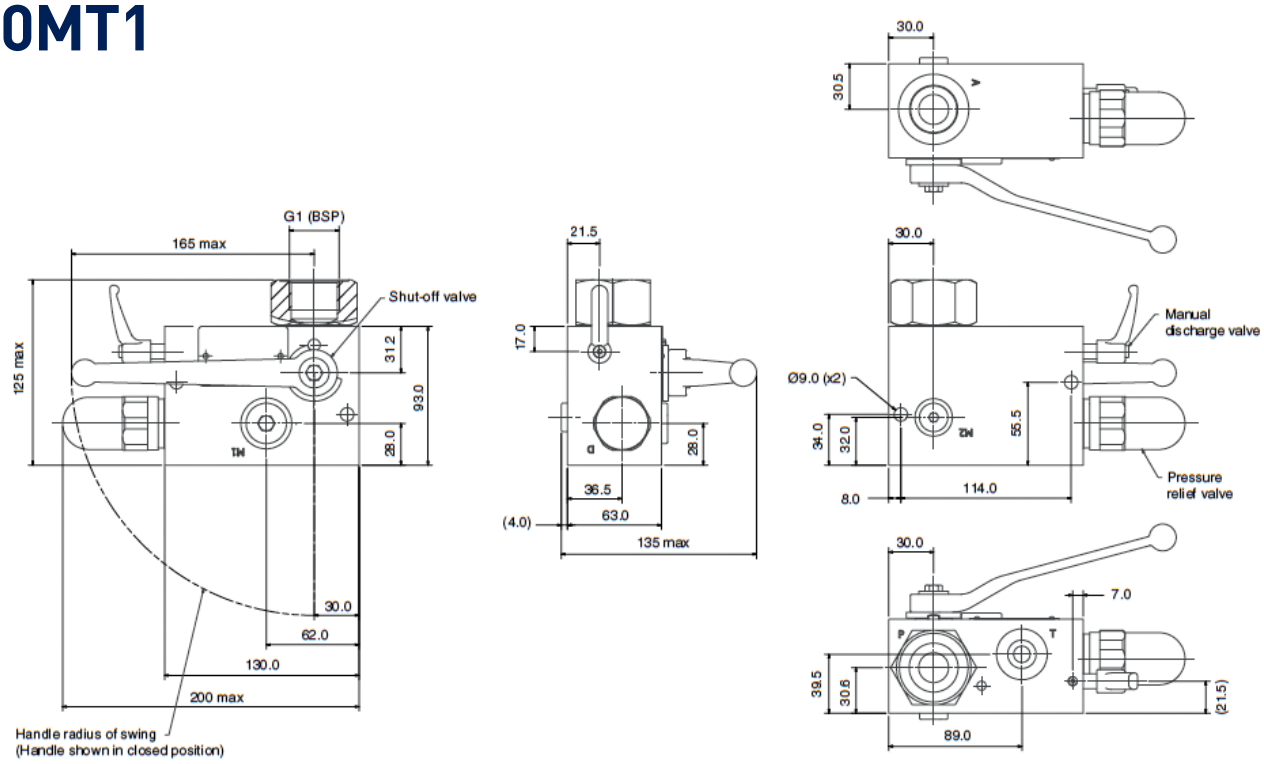

SBA20ET1

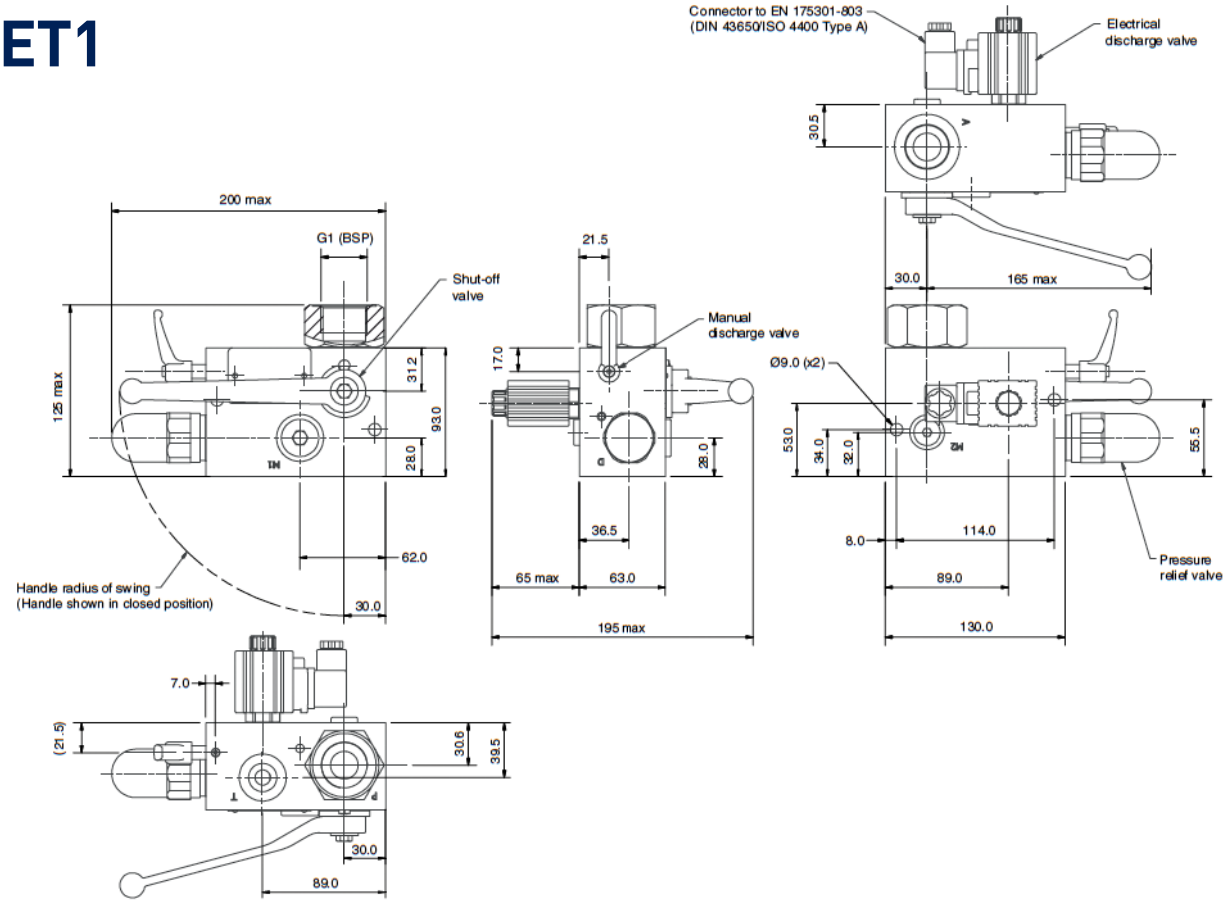

Above dimensions are in mm and are subject to manufacturing tolerances.

SBA32MT1

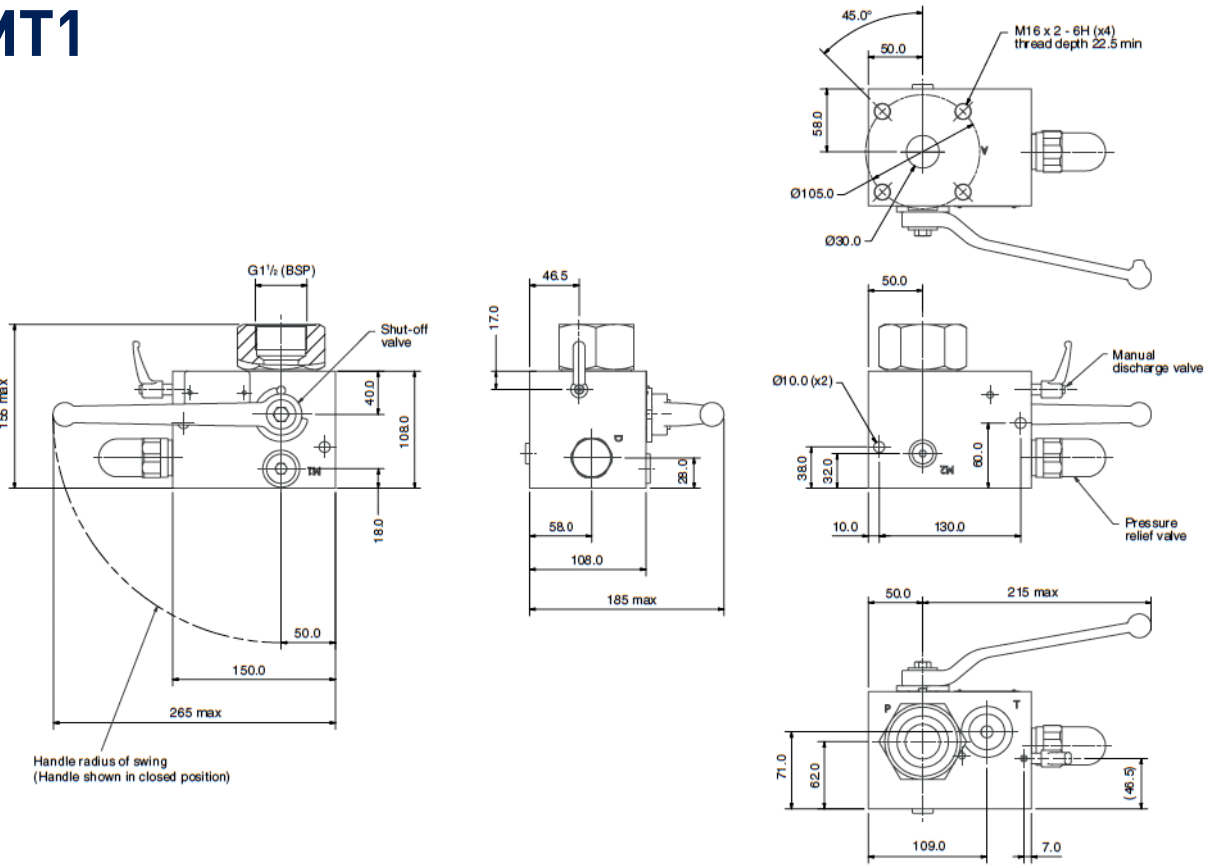

SBA32ET1

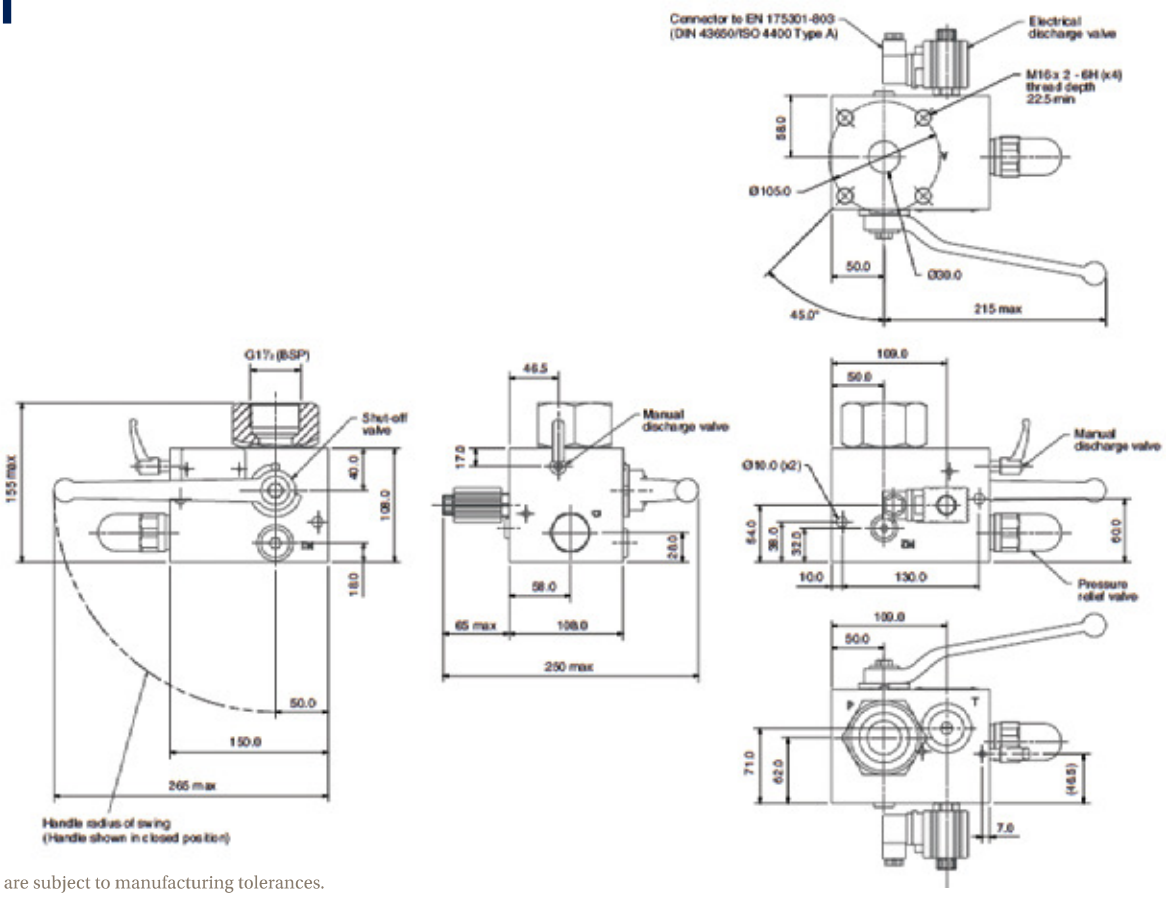

Above dimensions are in mm and are subject to manufacturing tolerances.

Adapters - Accumulator to SBA Safety Block

Accumulator Fluid Port D1		Safety Block Port A	SW	L	L1	D2	D3	Weight (Kg)	Part Number	Use with SBA	For Accumulator Type		
											Bladder	Diaphragm	Piston
G3/4	ISO 228	M33 x2	46	33	16	53	16	04	UEST-T-3/4	10 & 20	x		
G1 1/4	ISO 228	M33 x2	55	41	20	63	20	04	UEST-T-1 1/4	10 & 20	x		
G2	ISO 228	M33 x2	80	46	22	90	20	15	UEST-T-2	10 & 20	x		
G2	ISO 228	Flange 100	-	50	22	-	30	22	UEST-F-2	32	x		
G1/2	ISO 228	M33 x2	46	34	14	53	12	04	UEST-T-1/2ED	10 & 20		x	x
G3/4	ISO 228	M33 x2	46	36	16	53	16	04	UEST-T-3/4ED	10 & 20		x	x
G1 1/2	ISO 228	Flange 100	-	70	22	-	30	23	UEST-F-1 1/2	32			x

Threaded Adapter
UEST-T-xx

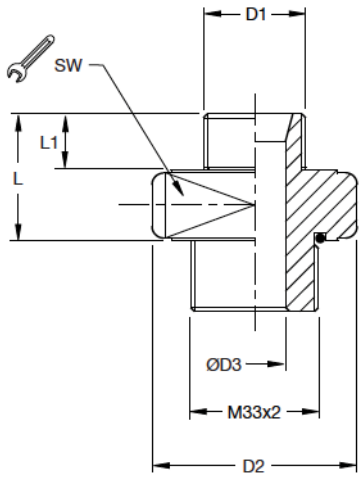

Flanged Adapter
UEST-F-xx

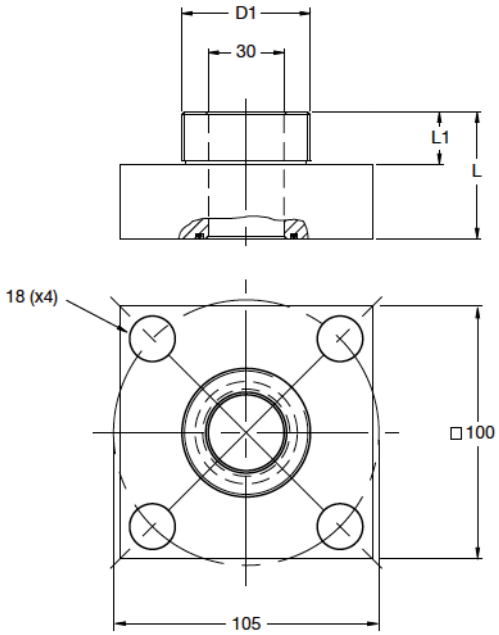

Relief Valve Block SD/SL

Safety unit able to limit the pressure to the rating value of the accumulator using for the pressure test

Type	Connection accumulator side code	H (mm)	A Connection accumulator side	P Pressure line	T Return tank
SL 10	8	57	G 1/2"	G 1/2"	G 3/8"
SL 16	2	56	G 3/4"	G 3/4"	G 3/8"
SL 16	1	67	G1 1/4"	G1 1/4"	G 3/8"
SL 16	4	67	M40 x 1.5	M40 x 1.5	G 3/8"
SL 24	3	70	G2"	G2"	G 3/8"
SL 24	5	70	M50 x 150	M50 x 150	G 3/8"

Above dimensions are in mm and are subject to manufacturing tolerances.

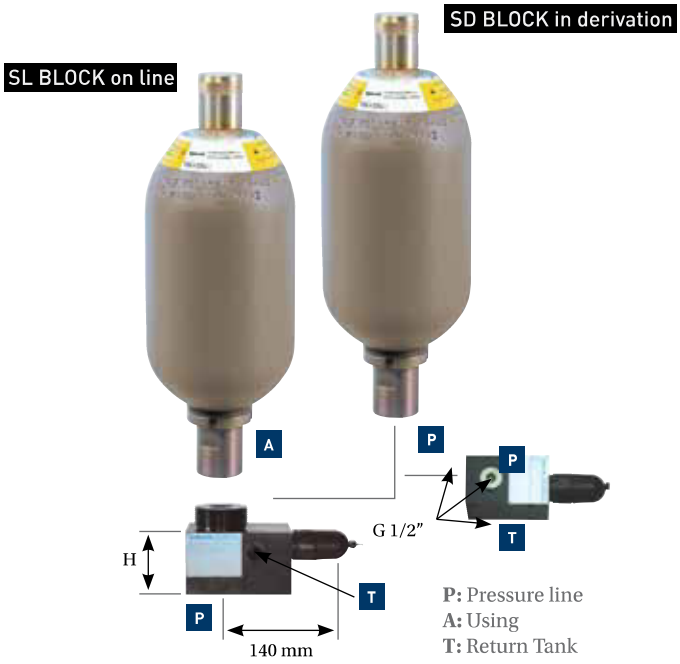

Type SL (assembly in line)

With seals in Viton All Fluids except for Skydrol applications (consult Parker)

Type	Connection accumulator side	Part Number
SL BLOCK on line	**SL 10/8**	3517608XXX2
	SL 16/1	3517091XXX2
	SL 24/3	3517073XXX2

Type SD (assembly in derivation)

SD BLOCK	SD 24/0	3517060XXX2

xxx to be replaced with the relief valve set pressure in bar e.g.35176083502 for relief valve preset to 350 bar

ECA & ECSA Series Safety Block

TECHNICAL DATA CARBON STEEL SAFETY BLOCK ECA

(345 BAR)

Maximum working pressure: 345 bar
Materials: Carbon steel. All blocks are fully tested.
Seals: Nitrile fitted as standard. Viton and other options also available.

Connections :
- Pressure gauge connection (M port).
- Wide range of adaptors for accumulator connection.
- All G threads (BSP) to BS2779 1986. Performance data available.

Other:
- Pressure relief valve for the protection of accumulator.
- Manual dump to tank valve as standard.
- Optional additional electomagnetic dump to tank valve.

Manual version

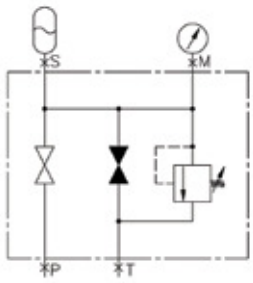

Circuit Flow Diagram

TECHNICAL DATA STAINLESS STEEL SAFETY BLOCK ECSA

(345 BAR & 690 BAR)

Materials: 316 Stainless steel. All blocks are fully tested.
Seals: Nitrile fitted as standard. Viton and other options also available.
Connections :
- Pressure gauge connection (M port).
- Wide range of adaptors for accumulator connection.
- All G threads (BSP) to BS2779 1986.
- For 760 bar only - All NPT to ANSI/ASME B.1.20.1 1983
- Performance data available.

Other:
- Pressure relief valve for the protection of accumulator.
- Manual dump to tank valve as standard.

Electrical version

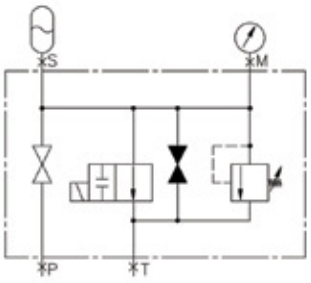

Circuit Flow Diagram

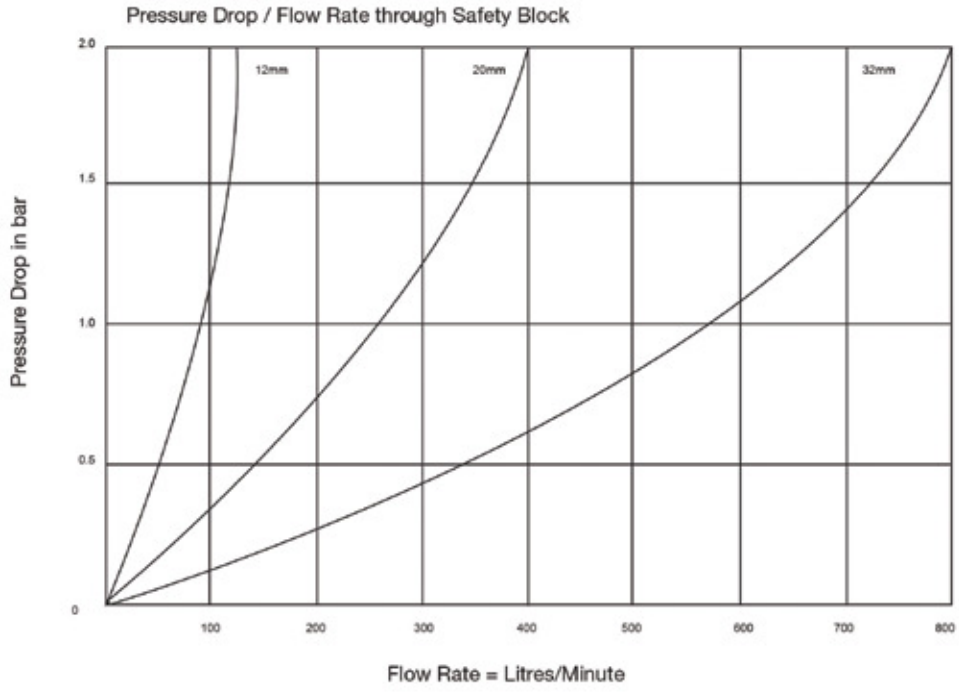

EC(S)A Series: How to order an ECA or ECSA Safety Block

ECA12 01 L N 2 XXX

Type

ECA	Carbon Steel
ECSA	Stainless Steel

Size

12 / 20 / 32

Dump to tank valve (type)

Code:

01	Mechanical
02	Mechanical & Electrical (carbon steel only)

Seal Material

Code:	Seal Material:
L	Nitrile
V	Flurocarbon

Special Requirement

Code:	Special Requirements:
N	None
A	110v AC*
B	220v AC*
G	24v DC* *Not available for stainless steel

Port Interface (690 bar only)

Code:	Port Interface**:
2	BSP
3	NPT **Only available for 690 bar, stainless steel

Relief valve setup (Bar)

Indicate pressure in Bar

ECA, Carbon Steel, 345 Bar

Part Number	Port Sizes				Dimensions (mm - for standard (01) Safety Block)			
	S port Accumulator	P port process	T port tank	M port Gauge	A	B	C	D Handle Length
ECA12-01-L-N	G 1/2"	G 1/2"	G 1/4"	G 1/4"	76	93	60	115
ECA20-01-L-N	G 3/4"	G 3/4"	G 3/8"	G 1/4"	90	108	70	160
ECA32-01-L-N	G1 1/4"	G1 1/4"	G 3/8"	G 1/4"	90	131	90	300

ECSA, Stainless Steel, 345 Bar

Part Number	Port Sizes				Dimensions (mm - for standard (01) Safety Block)			
	S port Accumulator	P port process	T port tank	M port Gauge	A	B	C	D Handle Length
ECSA12-01-L-N	G 1/2"	G 1/2"	G 1/4"	G 1/4"	65	94	76	115
ECSA20-01-L-N	G 3/4"	G 3/4"	G 3/8"	G 1/4"	70	108	90	160
ECSA32-01-L-N	G1 1/4"	G1 1/4"	G 3/8"	G 1/4"	90	131	105	300

ECSA, Stainless Steel, 690 Bar

Part Number	Port Sizes				Dimensions (mm - for standard (01) Safety Block)			
	S port Accumulator	P port process	T port tank	M port Gauge	A	B	C	D Handle Length
ECSA12-01-L-N-2	G 1/2"	G 1/2"	G 1/4"	G 1/4"	70	94	85	115
ECSA12-01-L-N-3	1/2" NPT	1/2" NPT	1/4" NPT	1/4" NPT	70	94	85	115

- All NPT to ANSI/ASME B.1.20.1. 1983
- All G threads (BSP) to BS2779 1986

ECA

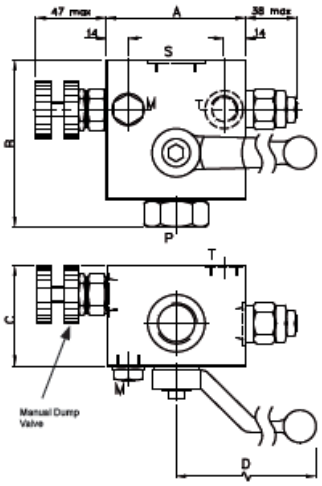

ECSA

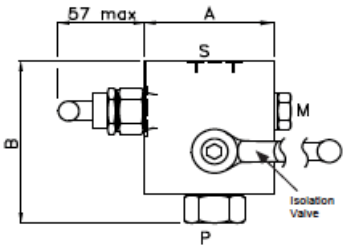

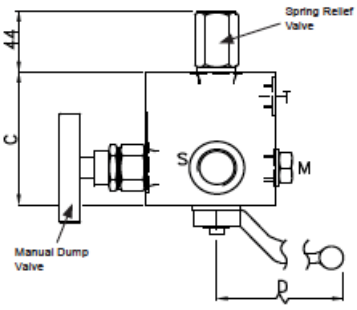

SAFETY BLOCK ECA&ECSA/ACCUMULATORS

For complete unit, please order safety block + Accumulator adaptor + Accumulator seal + Adaptor seal (see table below)

Construction	Accumulator fluid port sealing system	Fluid port dimension	Block P/N	Safety Block Port	Accumulator adaptor	Accumulator seal	Adaptor seal
Carbon Steel	O'ring	3/4 BSP	ECA12-01-L-N	1/2"BSPF	Consult Parker	40893-A00	40503-A97
	O'ring	1-1/4 BSP	ECA12-01-L-N	1/2"BSPF	55410-V10	40488-A00	40503-A97
	O'ring	2 BSP	ECA12-01-L-N	1/2"BSPF	54442-V10	40451-A00	40503-A97
	O'ring	1-1/4 BSP	ECA20-01-L-N	3/4"BSPF	54667-V10	40488-A00	40505-A97
	O'ring	2 BSP	ECA20-01-L-N	3/4"BSPF	54411-V10	40451-A00	40505-A97
	O'ring	1-1/4 BSP	ECA32-01-L-N	1.1/4"BSPF	Consult Parker	40488-A00	40508-A97
	O'ring	2 BSP	ECA32-01-L-N	1.1/4"BSPF	Consult Parker	40451-A00	40508-A97
	Bonded seal	1/2 BSPF	ECA12-01-L-N	1/2"BSPF	54605-V10	40503-A97	40503-A97
	Bonded seal	3/4 BSPF	ECA12-01-L-N	1/2"BSPF	50716-V10	40505-A97	40503-A97
	Bonded seal	1 BSPF	ECA12-01-L-N	1/2"BSPF	50715-V10	40507-A97	40503-A97
	Bonded seal	1-1/4 BSPF	ECA12-01-L-N	1/2"BSPF	50713-V10	40508-A97	40503-A97
	Bonded seal	2 BSPF	ECA12-01-L-N	1/2"BSPF	50454-V10	40511-A97	40503-A97
	Bonded seal	3/4 BSPF	ECA20-01-L-N	3/4"BSPF	50053-V10	40505-A97	40505-A97
	Bonded seal	1 BSPF	ECA20-01-L-N	3/4"BSPF	50714-V10	40507-A97	40505-A97
	Bonded seal	1-1/4 BSPF	ECA20-01-L-N	3/4"BSPF	50712-V10	40508-A97	40505-A97
	Bonded seal	2 BSPF	ECA20-01-L-N	3/4"BSPF	50711-V10	40511-A97	40505-A97
	Bonded seal	1 BSPF	ECA32-01-L-N	1.1/4"BSPF	50304-V10	40507-A97	40508-A97
	Bonded seal	1-1/4 BSPF	ECA32-01-L-N	1.1/4"BSPF	50055-V10	40508-A97	40508-A97
	Bonded seal	2 BSPF	ECA32-01-L-N	1.1/4"BSPF	52012-V10	40511-A97	40508-A97
Stainless steel	O'ring	3/4 BSP	ECSA12-01-L-N	1/2"BSPF	Consult Parker	40893-A00	40503-A98
	O'ring	1-1/4 BSP	ECSA12-01-L-N	1/2"BSPF	55410-006	40488-A00	40503-A98
	O'ring	2 BSP	ECSA12-01-L-N	1/2"BSPF	54442-006	40451-A00	40503-A98
	O'ring	1-1/4 BSP	ECSA20-01-L-N	3/4"BSPF	54667-006	40488-A00	40505-A98
	O'ring	2 BSP	ECSA20-01-L-N	3/4"BSPF	54411-006	40451-A00	40505-A98
	O'ring	1-1/4 BSP	ECSA32-01-L-N	1.1/4"BSPF	Consult Parker	40488-A00	40508-A98
	O'ring	2 BSP	ECSA32-01-L-N	1.1/4"BSPF	Consult Parker	40451-A00	40508-A98
	Bonded seal	1/2 BSPF	ECSA12-01-L-N	1/2"BSPF	54605-006	40503-A98	40503-A98
	Bonded seal	3/4 BSPF	ECSA12-01-L-N	1/2"BSPF	50716-006	40505-A98	40503-A98
	Bonded seal	1 BSPF	ECSA12-01-L-N	1/2"BSPF	50715-006	40507-A98	40503-A98
	Bonded seal	1-1/4 BSPF	ECSA12-01-L-N	1/2"BSPF	50713-006	40508-A98	40503-A98
	Bonded seal	2 BSPF	ECSA12-01-L-N	1/2"BSPF	50454-006	40511-A98	40503-A98
	Bonded seal	3/4 BSPF	ECSA20-01-L-N	3/4"BSPF	50053-006	40505-A98	40505-A98
	Bonded seal	1 BSPF	ECSA20-01-L-N	3/4"BSPF	50714-006	40507-A98	40505-A98
	Bonded seal	1-1/4 BSPF	ECSA20-01-L-N	3/4"BSPF	50712-006	40508-A98	40505-A98
	Bonded seal	2 BSPF	ECSA20-01-L-N	3/4"BSPF	50711-006	40511-A98	40505-A98
	Bonded seal	1 BSPF	ECSA32-01-L-N	1.1/4"BSPF	50304-006	40507-A98	40508-A98
	Bonded seal	1-1/4 BSPF	ECSA32-01-L-N	1.1/4"BSPF	50055-006	40508-A98	40508-A98
	Bonded seal	2 BSPF	ECSA32-01-L-N	1.1/4"BSPF	52012-006	40511-A98	40508-A98
Stainless steel	O' ring	1" BSP (special)	ECSA12-01-L-N-2	1/2"BSPF	Consult Parker	101006-00033 + 40857-P00	40503-A98
	O' ring	2" BSP (special)	ECSA12-01-L-N-2	1/2"BSPF	55682-005	40455-A00 + 40456-P00	40503-A98
	O' ring	1" BSP (special)	ECSA12-01-L-N-3	1/2"NPTF	54579-005	101006-00033 + 40857-P00	N/a
	O' ring	2" BSP (special)	ECSA12-01-L-N-3	1/2"NPTF	55687-005	40455-A00 + 40456-P00	N/a

Burst Disc Kit

Up to 650 BAR
- CE Marked according to PED 2014/68/EU

Parker burst discs are available for the EHV range of accumulators, designed adaptor, available in carbon steel or stainless steel.

Burst discs are a safety device which release the gas pressure independent of the pressure being caused by a fire or a failure of other safety equipment in the system.

This is a secondary safety device and it should be set higher than the normal hydraulic safety devices in the system.

Complete kit of burst disc (1) includes adaptor and label (2), o-ring (3), burst disc (4)

For installation, please consult user manual delivered with declaration of manufacturing of conformity (3.1 certificate)

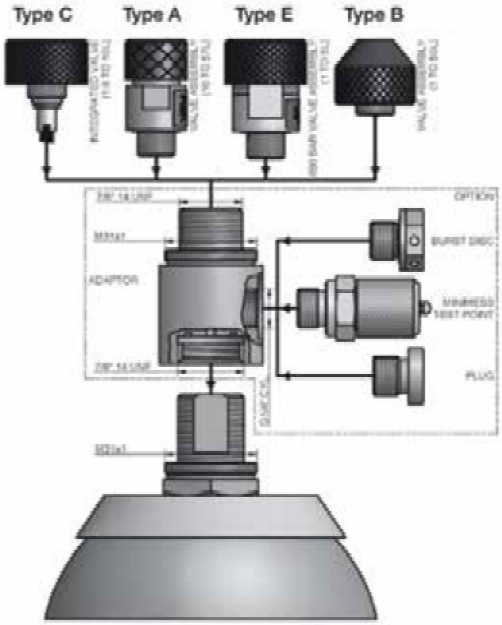

Type	Carbon Steel	Stainless Steel
	Part Number	Part Number
Adaptor M-F7/8"14UNF-FG1/4"	11148500200	11148501700

Type	Carbon Steel Kit	Stainless Steel Kit	Burst Pressure in bar at temperature					P/N Stainless Steel Burst Disc (only)
	Part Number	Part Number	80°C	40°C*	20°C*	0°C*	- 20°C*	
Burst Disc Kit G¼ 230 B	11172700223	11172701723	230	240	247	254	264	11171700000
Burst Disc Kit G¼ 250 B	11172800223	11172801723	250	261	269	277	288	11171800000
Burst Disc Kit G¼ 275 B	11172900223	11172901723	275	287	296	305	317	11171900000
Burst Disc Kit G¼ 290 B	11173000223	11173001723	290	303	312	321	334	11172000000
Burst Disc Kit G¼ 300 B	11173100223	11173101723	300	313	323	333	346	11172100000
Burst Disc Kit G¼ 360 B	11173200223	11173201723	360	375	387	399	414	11172200000
Burst Disc Kit G¼ 385 B	11173300223	11173301723	385	402	414	426	443	11172300000
Burst Disc Kit G¼ 420 B	11173400223	11173401723	420	438	452	466	484	11172400000
Burst Disc Kit G¼ 480 B	11173500223	11173501723	480	501	516	531	552	11172500000
Burst Disc Kit G¼ 650 B	11173600223	11173601723	650	678	699	720	748	11172600000

* Temp ranges are shown as indicative tolerances only. Actual performance would require testing to confirm

Permanent charging block

A permanent charging block directly mounted on the bladder accumulator steam valve is a helpful device to continuously monitor nitrogen pressure (P0).

Note : to check actual nitrogen value (P0) accumulator must be depressurized on oil side

It includes :

- Adapter
- Pressure gauge
- O-ring
- Gas Valve

Part Number (carbon steel adaptor) :

Part Number (carbon steel adaptor)	Designation
11153700223	Permanent Charging Block 0 – 60 B
11153900223	Permanent Charging Block 0 – 250 B
11154000223	Permanent Charging Block 0 – 350 B

Also available in stainless steel: on request

Remote permanent charging block

Remote charging equipment is an helpful device to check nitrogen pressure (P0) when gas valve access tricky. It consists on adaptor directly connected to accumulator steam valve and a block linked equipped with pressure gauge and gas valve .

Pipe between adaptor and block not include.

Note : to check actual nitrogen value (P0) accumulator must be depressurized on oil side

Monitoring block equipped with 2 fastening threaded holes on each two faces (M6x 100 ; depth 15 mm)

It includes :

- adaptor (4) for 7/8 " UNF steam valve
- remote block (1) including :
  - . gas valve (2)
  - . pressure gauge (3)
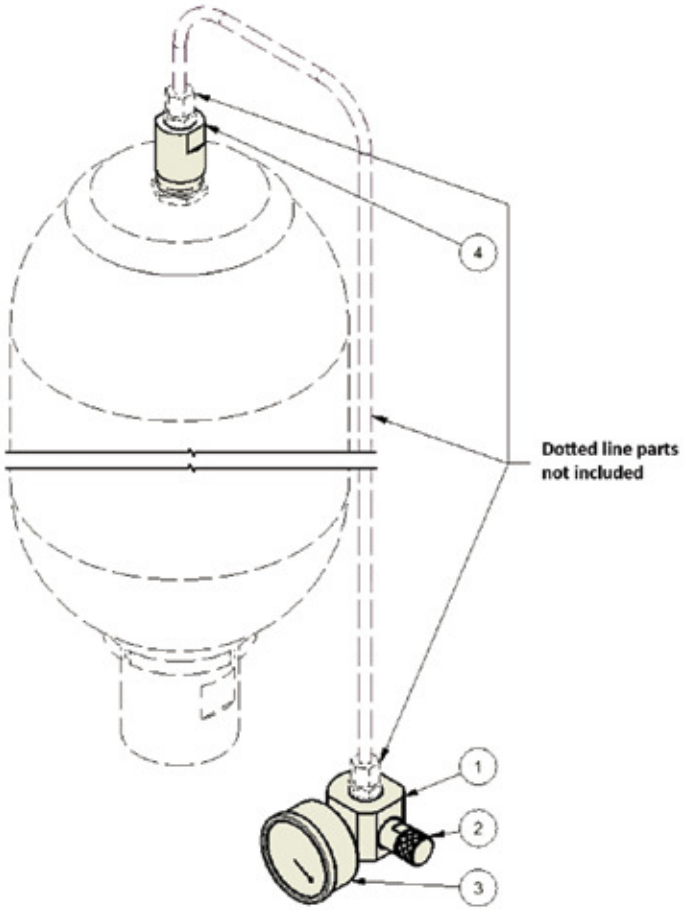
Type	Part Number Zinc Plated Steel	Part Number stainless steel
25B Monitoring Charging Set	11269700223	11269701723
60B Monitoring Charging Set	11269800223	11269801723
250B Monitoring Charging Set	11269900223	11269901723
400B Monitoring Charging Set	11270000223	11270001723
600B Monitoring Charging Set	11270100223	11270101723